UNITED STATES DEPARTMENT OF COMMERCE
Chief Financial Officer
Assistant Secretary for Administration
Washington, D.C. 20230

JUL 31 2007

The Honorable Barbara A. Mikulski
Chairman
Subcommittee on Commerce, Justice,
Science and Related Agencies
Committee on Appropriations
United States Senate
Washington, D.C. 20510

Dear Madam Chairman:

Enclosed is the National Oceanic and Atmospheric Administration (NOAA) report to Congress on Gulf of Mexico Shrimp Trawl Bycatch Reduction as required by the Conference Report accompanying the Science, State, Justice, Commerce, and Related Agencies Appropriations Act, 2006 (House Report 109-272).

In this report, NOAA has provided a comprehensive summary of research conducted by NOAA and industry research partners to develop and evaluate technologies to reduce the incidental take and mortality of finfish bycatch in the penaied shrimp fishery of the southeastern United States. The report provides accomplishments in bycatch reduction device (BRD) technology from the BRD research and development program from 1990-2003. Information is also provided on BRD certification and testing conducted since 1998 to evaluate the effectiveness of meeting bycatch reduction goals.

Please contact me at (202) 482-4951 if you have any questions. Thank you for your continued support of the Department of Commerce and its programs.

Sincerely yours,

Otto J. Wolff
Chief Financial Officer and
Assistant Secretary for Administration

Enclosure

UNITED STATES DEPARTMENT OF COMMERCE
Chief Financial Officer
Assistant Secretary for Administration
Washington, D.C. 20230

JUL 31 2007

The Honorable Richard C. Shelby
Ranking Member
Subcommittee on Commerce, Justice,
Science and Related Agencies
Committee on Appropriations
United States Senate
Washington, D.C. 20510

Dear Senator Shelby:

Enclosed is the National Oceanic and Atmospheric Administration (NOAA) report to Congress on Gulf of Mexico Shrimp Trawl Bycatch Reduction as required by the Conference Report accompanying the Science, State, Justice, Commerce, and Related Agencies Appropriations Act, 2006 (House Report 109-272).

In this report, NOAA has provided a comprehensive summary of research conducted by NOAA and industry research partners to develop and evaluate technologies to reduce the incidental take and mortality of finfish bycatch in the penaied shrimp fishery of the southeastern United States. The report provides accomplishments in bycatch reduction device (BRD) technology from the BRD research and development program from 1990-2003. Information is also provided on BRD certification and testing conducted since 1998 to evaluate the effectiveness of meeting bycatch reduction goals.

Please contact me at (202) 482-4951 if you have any questions. Thank you for your continued support of the Department of Commerce and its programs.

Sincerely yours,

Otto J. Wolff
Chief Financial Officer and
Assistant Secretary for Administration

Enclosure

UNITED STATES DEPARTMENT OF COMMERCE
Chief Financial Officer
Assistant Secretary for Administration
Washington, D.C. 20230

JUL 3 1 2007

The Honorable Alan B. Mollohan
Chairman
Subcommittee on Commerce, Justice,
Science and Related Agencies
Committee on Appropriations
U.S. House of Representatives
Washington, D.C. 20515

Dear Mr. Chairman:

Enclosed is the National Oceanic and Atmospheric Administration (NOAA) report to Congress on Gulf of Mexico Shrimp Trawl Bycatch Reduction as required by the Conference Report accompanying the Science, State, Justice, Commerce, and Related Agencies Appropriations Act, 2006 (House Report 109-272).

In this report, NOAA has provided a comprehensive summary of research conducted by NOAA and industry research partners to develop and evaluate technologies to reduce the incidental take and mortality of finfish bycatch in the penaied shrimp fishery of the southeastern United States. The report provides accomplishments in bycatch reduction device (BRD) technology from the BRD research and development program from 1990-2003. Information is also provided on BRD certification and testing conducted since 1998 to evaluate the effectiveness of meeting bycatch reduction goals.

Please contact me at (202) 482-4951 if you have any questions. Thank you for your continued support of the Department of Commerce and its programs.

Sincerely yours,

Otto J. Wolff
Chief Financial Officer and
Assistant Secretary for Administration

Enclosure

UNITED STATES DEPARTMENT OF COMMERCE
Chief Financial Officer
Assistant Secretary for Administration
Washington, D.C. 20230

JUL 3 1 2007

The Honorable Rodney P. Frelinghuysen
Ranking Member
Subcommittee on Commerce, Justice,
Science and Related Agencies
Committee on Appropriations
U.S. House of Representatives
Washington, D.C. 20515

Dear Representative Frelinghuysen:

Enclosed is the National Oceanic and Atmospheric Administration (NOAA) report to Congress on Gulf of Mexico Shrimp Trawl Bycatch Reduction as required by the Conference Report accompanying the Science, State, Justice, Commerce, and Related Agencies Appropriations Act, 2006 (House Report 109-272).

In this report, NOAA has provided a comprehensive summary of research conducted by NOAA and industry research partners to develop and evaluate technologies to reduce the incidental take and mortality of finfish bycatch in the penaied shrimp fishery of the southeastern United States. The report provides accomplishments in bycatch reduction device (BRD) technology from the BRD research and development program from 1990-2003. Information is also provided on BRD certification and testing conducted since 1998 to evaluate the effectiveness of meeting bycatch reduction goals.

Please contact me at (202) 482-4951 if you have any questions. Thank you for your continued support of the Department of Commerce and its programs.

Sincerely yours,

Otto J. Wolff
Chief Financial Officer and
Assistant Secretary for Administration

Enclosure

REPORT TO CONGRESS

GULF OF MEXICO SHRIMP TRAWL BYCATCH REDUCTION

PREPARED BY

NATIONAL MARINE FISHERIES SERVICE

NATIONAL OCEANIC AND ATMOSPHERIC ADMINISTRATION

U.S. DEPARTMENT OF COMMERCE

Gulf of Mexico Shrimp Trawl Bycatch Reduction

Table of Contents

List of Tables				**4**
List of Figures				**5**
1.0		**Executive Summary**		**7**
2.0		**Foreword**		**10**
3.0		**About This Report**		**11**
	3.1	**The Problem**		**11**
4.0		**NMFS Bycatch Research Program**		**14**
5.0		**BRD Development Program Accomplishments**		**16**
	5.1	**Technological Devices to Minimize Bycatch**		**16**
		5.1.1	Methods	17
		5.1.2	Results	18
		5.1.3	Monitoring BRD Effectiveness	19
	5.2	**Status of BRD Performance**		**25**
		5.2.1	Methods	25
		5.2.1.1	Industry Performance with Certified BRDs	26
		5.2.1.2	BRD Certification	27
		5.2.2	Results	27
		5.2.2.1	Industry Performance with Certified BRDs	27
		5.2.2.2	BRD Certification Tests	31
		5.2.3	Discussion	34
6.0		**Ongoing Efforts to Further Reduce Bycatch**		**36**
	6.1	**Research Efforts to Develop Improved BRD Designs**		**36**
		6.1.1	Inclined Water Flow Studies	37
		6.1.2	The Fish Box	39
		6.1.3	Side Opening Grids	40
		6.1.4	Red Snapper Sensitivity to Infrared Light	42
		6.1.5	Night Observations Using Infrared Lights	43
		6.1.6	NOAA Composite Panel BRD	46
		6.1.7	Swimming Performance and Behavior	47

6.1.8 Industry Assistance 48
6.1.9 Discussion 49

6.2 Management Measures 49
6.2.1 Amendment 11 to the FMP for the Shrimp Fishery of the Gulf of Mexico 50
6.2.2 Amendment 13 to the FMP for the Shrimp Fishery of the Gulf of Mexico 50
6.2.3 Next Steps in Management—BRD Certification and Designs 51

7.0 Bycatch Reduction Goals and Future Outlook 53

7.1 NMFS National Bycatch Strategy 53
7.2 NMFS Southeast Region Bycatch Reduction Goals 53
7.3 Status of the Gulf of Mexico Shrimp Trawl Fishery 56
7.4 Reduction in Shrimp Trawl Effort and Implications for Bycatch Reduction 62

8.0 Conclusion

9.0 Literature Cited 66

Appendix I: The Mandate from Congress **70**

Appendix II: Observer Coverage of the U.S. Gulf of Mexico Shrimp Fishery, February 1992 – December 2004 **72**

Appendix III: List of Publications from Shrimp Fishery Bycatch Research **81**

Appendix IV: List of Projects in Shrimp Fishery Bycatch Research **98**

List of Tables

Table 1	Detailed shrimp fishing information for the Gulf of Mexico, Subareas 10-21, >10 fm	21
Table 2	Shrimp, total fish, and snapper F reduction for the Gulf Fisheye	28
Table 3	Shrimp, total fish, and red snapper F reduction for Gulf Fisheyes fished in a legal configuration	29
Table 4	Shrimp, total fish, and red snapper F reduction for Gulf Fisheyes fished in an illegal configuration	30
Table 5	Bycatch reduction devices (BRDs) tested under the regional bycatch program 1999–2003 (February 2003 analysis)	32
Table 6	Reduction rate estimates for the Jones-Davis with a Double Hoop	32
Table 7	Reduction rate estimates for the Modified Jones-Davis	33
Table 8	Reduction rate estimates for the Fish Box	33
Table 9	Reduction rate estimates for the Double Opposed Fisheye	33
Table 10	Reduction rate estimates for the Modified Fish Box	33
Table 11	Reduction rate estimates for the Hickman III	33
Table 12	Reduction rate estimates for the Jones-Davis with a Bottom Fisheye	34
Table 13	Reduction rate estimates for the Fish Tube	34
Table 14	Reduction rate estimates for the Extended Funnel	34

List of Figures

Figure 1	Fisheye BRD	18
Figure 2	Jones-Davis BRD	19
Figure 3	Extended funnel BRD	19
Figure 4	Fisheye position relative to elephant ear	23
Figure 5	Gulf Fisheye red snapper F reduction by vessels with greater than 30 tows containing snapper	28
Figure 6	Percentage of tows occurring behind, between, and forward of the allowed installation range of 8.5ft. to 12.5ft. from the codend tie-off rings	29
Figure 7	Percentage of tows occurring behind, under the elephant ear, and forward of the elephant ear region of the codend	29
Figure 8	Fisheye reduction rates for red snapper and shrimp for fisheye between 8.5 ft. and 12.5 ft. from the tie-off rings as fished ahead, under, and behind the elephant ear	30
Figure 9	Reduction rates for snapper and shrimp for legal fisheyes installed in the 12.5 ft. to 10.6 ft. positions and the 10.5 ft. to 8.5 ft. positions	31
Figure 10	A) Schematic representation of prototype BRD. B) Water flow pattern observed	38
Figure 11	Diagram of experimental apparatus to evaluate fish response to inclined water flow	39
Figure 12	Fish Box bycatch reduction device	39
Figure 13	Side Opening Grid with flap configurations	41
Figure 14	Diagram of Optomotor Apparatus	42
Figure 15	Response of juvenile red snapper when the optomotor apparatus is turned clockwise with a) fluorescent lighting and b) infrared illumination	43
Figure 16	BRD Designs evaluated during the August, 2003 research cruise on the R/V Caretta	45
Figure 17	Fisheye configurations with fish congregation areas	45
Figure 18	a) NOAA Composite Panel BRD with b) schematic of the composite panel construction	47
Figure 19	Annual catch data for the Gulf of Mexico shrimp fishery	57
Figure 20	Annual effort data for the Gulf of Mexico shrimp fishery	58
Figure 21	Annual CPUE data for the Gulf of Mexico shrimp fishery	60
Figure 22	Annual size data for the Gulf of Mexico shrimp fishery	61
Figure 23	Annual offshore effort for the Gulf of Mexico shrimp fishery	62
Figure 24	Shrimp effort in the 10-30 fathom depth zone	64
Figure A1	Distribution of sampling effort (tows) based on observer coverage of the US Gulf of Mexico shrimp fishery from 1992 through 2004	72
Figure A2	Number of sea days completed by year based on observer coverage of the US Gulf of Mexico shrimp fishery from February 1992 through December 2004	77
Figure A3	Sea days completed by year and state in the Gulf of Mexico based	77

	on observer coverage of the US Gulf of Mexico shrimp fishery from February 1992 through December 2004	
Figure A4	Number of tows sampled by year and state in the Gulf of Mexico based on observer coverage of the US Gulf of Mexico shrimp fishery from February 1992 through December 2004	78
Figure A5	Percentage of 12,991 sea days by project from observer coverage of the US Gulf of Mexico shrimp fishery from February 1992 through December 2004	79
Figure A6	Percentage of 21,867 tows by project from observer coverage of the US Gulf of Mexico shrimp fishery from February 1992 through December 2004	79

1.0 EXECUTIVE SUMMARY

The Fishery Conservation Amendments of 1990 (Public Law 101-627, Section 110 (c)) amended the Magnuson-Stevens Fishery Conservation and Management Act (16 U.S.C. 1801) requiring the Secretary of Commerce (Secretary) to conduct a research program to determine the impact of incidental harvest by shrimp trawlers on federally managed fishery resources found along the nation's southeastern Atlantic and Gulf of Mexico coasts. This requirement was inspired at least in part by data indicating that over 80 percent of the fishing mortality on age 0 and age 1 red snapper was attributed to shrimp trawling (Goodyear and Phares, 1990). The National Oceanic and Atmospheric Administration's (NOAA) National Marine Fisheries Service (NMFS), acting on behalf of the Secretary, responded to congressional mandates by implementing a shrimp trawl bycatch research program.

This report provides a comprehensive summary of research conducted by NMFS and industry research partners to develop and evaluate technologies to reduce the incidental take and mortality of finfish bycatch in the penaeid shrimp fishery of the southeastern United States. Since 1999, NMFS has evaluated 54 conceptual designs and design modifications for bycatch reduction.

The most recent red snapper stock assessment (SEDAR, 2005), completed in 2005, resulted in significant differences in red snapper stock status parameter estimates relative to past assessments. Changes in the 2005 assessment that resulted in significant differences included separation of red snapper into eastern and western stocks, higher assumed natural mortality rates for age-0 and age-1 red snapper, and higher estimates of discard mortality in the directed fishery. Increased natural mortality rates for juvenile red snapper reduced the amount of red snapper bycatch attributed to the shrimp trawl fishery, as more juvenile red snapper were assumed to die from natural causes. In addition, higher discard mortality estimates in the directed fishery increased the morality rate attributed to that fishery.

According to the assessment, red snapper fishing mortality rates are too high in both the directed and shrimp fisheries. Although the directed fishery contributes a greater portion of fishing mortality than previously thought, shrimp trawl bycatch of red snapper remains a significant source of mortality in the western Gulf of Mexico.

This report answers the following questions:

- What bycatch tools currently are in use in the shrimp trawl industry?
- What is the efficacy of those tools in reducing bycatch?
- What ongoing efforts are occurring to reduce bycatch?
- What measurable accomplishments have taken place to reduce bycatch to date?
- What specific goals exist for reducing bycatch?
- What are NMFS' plans to achieve these goals?

Early sections of this report (3.0 and 4.0) present stand-alone historical overviews of the bycatch problem and the NMFS bycatch research program, followed by more detailed analyses of shrimp trawl bycatch research results, attempts to improve technologies and management measures, and the current status of the shrimp trawl fishery and its future.

The two bycatch tools currently in use in the shrimp trawl fishery—the Gulf Fisheye bycatch reduction device (BRD) and the Jones-Davis BRD—were developed and evaluated through the southeast regional bycatch research program (NMFS, 1998b). These two BRD designs were approved for implementation in the western Gulf of Mexico under Amendment 9 to the Fishery Management Plan (FMP) for the Shrimp Fishery of the Gulf of Mexico. Amendment 10 to the FMP for the Shrimp Fishery of the Gulf of Mexico required the installation of NMFS-certified BRDs to reduce the bycatch of finfish by at least 30% by weight in each net used aboard vessels trawling for shrimp in the Gulf of Mexico EEZ east of Cape San Blas, Florida

According to developmental research data, the Jones-Davis BRD demonstrated potential to reduce juvenile snapper mortality 52% to 67%. For the Gulf Fisheye BRD, the estimate reduction in juvenile snapper mortality ranged from 59% to 77% (Watson et al, 1997). Subsequent tests of the Gulf Fisheye BRD, the most widely used BRD, found that the estimated fishing mortality (F) reduction for red snapper was 11.7% with a 95% confidence interval of 4.3% to 19.1%. These data, collected from 2001 to 2003, indicated that many fishermen continued to install Gulf Fisheye BRDs in the prohibited section of the codend, even after federal regulations were amended in 1999 to restrict placement location of fisheyes (Federal Register, 1999). Even though a large percentage of tows were made with fisheyes installed in an illegal configuration, a comparison of results between legal and illegal fisheyes indicated that even legally placed fisheyes were not performing well.

Because of the similarity in size between bycatch species and shrimp in the Gulf of Mexico, NMFS' bycatch reduction research strategies have had to rely on behavioral differences. Technological limitations have forced most BRD development efforts to focus on behavioral observations made during daylight conditions. However, the shrimp trawl fishery in the Gulf of Mexico is primarily a night fishery. The recent implementation of ultra-bright infrared LEDs and low-light charge coupled device (CCD) cameras as research tools has been a major breakthrough in NMFS' ability to understand fish behavior in trawls at night. NMFS' current ability to effectively observe fish under nighttime commercial trawling conditions is leading to the development of more successful BRD designs.

It is clear that the efficacy of these tools in reducing bycatch, specifically juvenile snapper mortality, has been less than initially anticipated. NMFS has determined through several years of performance monitoring that the fisheye BRD does not reduce bycatch in practice as well as it did in the developmental testing phase, and this poor performance has been exacerbated through sub-optimal use and changes in fishing gear design and operation. In addition, regulations implemented to ensure compliance with guidelines for the appropriate use of the fisheye BRD have not been effective. The Jones-Davis BRD

has not been accepted by the fishery due to high cost and operational complexity. Therefore, new, more effective tools are needed to reduce bycatch, along with more effective incentives to ensure the proper use of these tools.

Numerous efforts are ongoing to reduce bycatch, especially through research efforts that are continuing to develop improved bycatch reduction technologies. Through the use of ultra-bright infrared LED lights and low-light CCD video cameras, NMFS recently has taken simple and cost-effective steps to make significant advances in our understanding of fish behavior in night-trawling conditions. Working cooperatively with the Gulf and South Atlantic Fisheries Foundation Inc., information on advancements in BRD technology and evaluation techniques periodically has been disseminated to the shrimping industry through video productions, presentations, and reports. Vessel sea time is provided annually to BRD developers for evaluation of prototype BRDs. During evaluations, NOAA divers obtain observations of fish behavior, video documentation of operational characteristics, water flow measurements, and delineation of water flow patterns associated with bycatch reduction designs.

Several measurable accomplishments to reduce bycatch have taken place to date. NMFS has determined that the Gulf Fisheye BRD has reduced fishing mortality (F) for red snapper by 11.7% and for total fish by 16.5%. However, as mentioned above, these amounts are lower than NMFS had anticipated. In addition, 54 conceptual designs and design modifications for bycatch reduction contributed by fishermen, net shops, gear technicians, and biologists have been evaluated since 1999. On the management side, NMFS has implemented Amendment 11 to the FMP for the Shrimp Fishery of the Gulf of Mexico, which for the first time requires owners and operators of all vessels harvesting shrimp from the EEZ of the Gulf to obtain a federal commercial vessel permit. NMFS also has approved Amendment 13 to the FMP for the Shrimp Fishery of the Gulf of Mexico, which will establish a 10-year moratorium on the issuance of new federal commercial vessel permits in the shrimp fishery. Amendment 13 will also mandate electronic logbooks and require vessels to take observers when selected. These effort controls and enhanced reporting requirements will help reduce bycatch.

Results from the most recent stock assessment (SEDAR, 2005) indicate the maximum sustainable yield of red snapper is significantly less than previously estimated. Higher commercial and recreational discard mortality rate estimates used in the most recent assessment relative to past assessments increase the bycatch mortality rate attributed to the directed fisheries. Additionally, higher juvenile natural mortality rate estimates used in the assessment reduce the influence of the shrimp trawl fishery. Although the proportional contribution of the fisheries to total red snapper fishing mortality is different than previously thought, shrimp trawl bycatch of red snapper remains a significant factor affecting stock status and long-term rebuilding goals.

NMFS' Southeast Regional Office and Southeast Fisheries Science Center annually update bycatch reduction goals related to their Southeast Region Bycatch Implementation Plan (available at http://www.nmfs.noaa.gov/bycatch.htm). The bycatch reduction goals

related to the Gulf of Mexico reef fish and shrimp fisheries for FY 2007 and 2008 include the following:

- Reduce bycatch and provide better bycatch estimates for red snapper and other species related to the shrimp fishery with respect to season, depth, and location through modification in 2007 of the shrimp bycatch protocol criteria that allow NMFS to designate more effective bycatch reduction devices.
- Reduce red snapper bycatch in the Gulf of Mexico shrimp and reef fish fisheries through an interim final rule for the 2007 fishing year.
- Continue to develop new and effective BRD designs that can be incorporated into the next amendment to the Fishery Management Plan for the Shrimp Fishery of the Gulf of Mexico.

NMFS plans to achieve these goals by working cooperatively with the Gulf of Mexico Fishery Management Council on management measures; standardizing and enhancing bycatch reporting methodologies, including data collection and monitoring; and enhancing education and outreach efforts. Because NOAA is unlikely to reach its goal of 60% to 80% reduction in bycatch mortality through technological means alone, these and other management steps are likely to be important.

2.0 FOREWORD

The Fishery Conservation Amendments of 1990 (Public Law 101-627, Section 110 (c)) amended the Magnuson Fishery Conservation and Management Act (Magnuson Act) (16 U.S.C. 1801) requiring the Secretary of Commerce (Secretary) to conduct a 3-year research program to determine the impact of incidental harvest by shrimp trawlers on federally managed fishery resources found along the Nation's southeastern Atlantic and Gulf of Mexico coasts. The Secretary was also required to establish a cooperative program to design and evaluate approaches for reducing the mortality of these incidentally harvested fishery resources. Upon its completion, Congress required the Secretary to submit a detailed report on program findings.

NOAA's National Marine Fisheries Service (NMFS), acting on behalf of the Secretary, responded fully to these initial Congressional mandates by implementing a shrimp trawl bycatch research program, scientifically valid and inclusive of affected and interested parties. February 1995 marked the completion of the third year of that intensive research effort, but not the completion of the entire research program. As mandated by 1990 Fishery Conservation Amendments, an intermediate report was submitted in April 1995 to apprise Congress of progress made to date and plans for completing the program.

The Sustainable Fisheries Act of 1996 (Public Law 104-297, Section 405) amended the Magnuson-Stevens Fishery Conservation and Management Act (Magnuson-Stevens Act) (16 U.S.C. 1801) to require the Secretary to complete the ongoing shrimp trawl bycatch program and submit a detailed report to Congress. Specifically, Section 405(e) of the Magnuson-Stevens Act, 16 U.S.C. 1881d(e), required that "The Secretary shall, within one year of completing the programs required by this section, submit a detailed report on the results of such programs to the Committee on Commerce, Science, and Transportation of the Senate and the Committee on Resources of the House of Representatives." The report submitted to Congress in October 1998 provided an assessment of the impact of incidental shrimp trawl bycatch on federally managed fishery resources and information needed to manage finfish bycatch in the Gulf of Mexico and South Atlantic shrimp fisheries (NMFS, 1998b). A major component of the southeast regional bycatch research program was the development and evaluation of bycatch reduction devices (BRDs). As a result of this program, two BRD designs—the fisheye BRD and the Jones-Davis BRD—were approved for implementation in the western Gulf of Mexico under Amendment 9 to the Fishery Management Plan for the shrimp fishery.

In 1998, NMFS implemented an intensive monitoring effort to provide data on the effectiveness of mandatory use of BRDs for reducing shrimp trawl bycatch, with emphasis on red snapper. In April 1999, NMFS reported on the results of the monitoring program. Performance problems with the fisheye BRD in some configurations resulted in subsequent regulations governing allowable fisheye placement (Watson et al., 1999). Monitoring of BRD performance in the fishery continued from 2001 to 2003 (Scott-Denton, 2004). Analyses of data indicated that the fisheye performance did not improve as a result of the regulation changes (Foster, 2004).

3.0 ABOUT THIS REPORT

Congress has expressed concern over the efficacy of shrimp bycatch tools currently in use. Goals for reductions in bycatch, such as juvenile red snapper, have not been met to date. NMFS has been directed to submit a report to Congress no later than April 30, 2006, that details the tools currently in use and their efficacy for reducing bycatch, ongoing efforts to further reduce bycatch, as well as any measurable accomplishments toward reduction to date. The Congressional oversight committee states bycatch reduction is imperative and thus is requiring a full report addressing goals for bycatch reduction and NMFS' specific plan for achieving reduction goals.

This report is a comprehensive summary of research conducted by NMFS and industry research partners to develop and evaluate technologies to reduce the incidental take and mortality of finfish bycatch in the penaeid shrimp fishery of the southeastern United States. The report is presented in sections chronologically, beginning with a description of the problem at hand (Section 3.1) and NMFS' bycatch research program (Section 4.0). Section 5.1 summarizes the regional research and development program to develop bycatch reduction device (BRD) technology conducted between 1990 and 1996. This summary includes detailed methods and results of the research program and results of NMFS' initial monitoring program to evaluate the effectiveness of the technologies conducted in 1998 after implementation of BRD requirements. Section 5.2 presents the current status of BRD performance, including methods used to calculate performance measurements, and new BRD certification testing (1999–2003). Section 6.0 presents the results of research to improve bycatch reduction technology conducted since implementation in 1998, management measures implemented in recent years to achieve measurable accomplishments toward shrimp bycatch reduction, and current plans for achieving reduction goals. The final section (7.0) describes the NMFS National Bycatch Strategy, NMFS Southeast Region bycatch reduction goals, and the status of the Gulf of Mexico shrimp trawl fishery and associated implications for bycatch reduction for the penaeid shrimp trawl fishery. Appendix II presents details of the observer program developed to monitor BRD performance between 1992 and 2004.

3.1 The Problem

Since the late 1940s, technological advances have revolutionized fishing vessels, fishing gear, navigational equipment, and fishing techniques. These advancements have enabled commercial and recreational fisherman to effectively catch the fish they seek, thus placing tremendous harvest pressure on many stocks. Many of these fisheries target a single species or groups of species (e.g., shrimp) and employ the most efficient fishing methods and gear available, but are seldom 100 percent selective. As a result, in most commercial and recreational fisheries worldwide, an incidental capture of non-target species and age groups occurs. This incidental harvest is termed bycatch.

In some fisheries, bycatch is commercially valuable and is landed along with the target species. In other fisheries, bycatch is non-marketable or illegal to land, and is therefore discarded with high mortality rates after target species have been removed. While

discarded bycatch is usually of little economic importance to these fisheries, the mortality of directly affected species is not without consequence. It can adversely affect the population size and structure of impacted stocks, reduce the availability of bycatch species to other fisherman that may target them in other fisheries, and result in fundamental changes in ecosystem energy flows.

Since the mid-1970s, concern over bycatch in the Gulf of Mexico and South Atlantic shrimp fisheries has intensified among state and federal fishery managers, conservationists, commercial and recreational fishermen, and the public. Concerns initially surfaced over the incidental capture of endangered or threatened sea turtles. Substantial progress, however, has been made to reduce sea turtle mortalities through the required use of certified turtle excluder devices (TEDs).

More recently, concern over shrimp trawl bycatch has broadened to include the incidental catch of finfish and other living marine resources, especially in light of data showing that over 80 percent of the fishing mortality on age 0 and age 1 red snapper was attributed to shrimp trawling (Goodyear and Phares, 1990). Concern over finfish bycatch also is being expressed intensely and globally for several important reasons:

1. An increased world demand for protein, linked with a growing realization that coastal ocean resources are finite and under stress, has focused national attention on the need to minimize waste in all fisheries, including valuable shrimp fisheries.

2. Declining landings for many species of marine finfish, shellfish, and crustaceans have precipitated the imposition of state and federal catch restrictions to maintain or rebuild overfished fish stocks. As a matter of equity, sport and commercial fishermen are reluctant to accept regulation of their directed fishing activities if management measures are not also imposed to reduce significant incidental fishing mortality.

3. Research findings in the 1980s and 1990s revealed that bycatch discards in the Gulf of Mexico and southeastern Atlantic shrimp fisheries were indeed significant. Although croaker, porgies, spot, and other non-federally managed groundfish species accounted for the larger share of bycatch, federally managed species such as red snapper, king mackerel, Spanish mackerel, and sharks were also represented.

4. Stock assessments in the early 1990s indicated some finfish species taken as bycatch in the shrimp fishery were under severe stress and would not recover quickly unless shrimp bycatch was reduced. Weakfish and Spanish mackerel in the South Atlantic and red snapper in the Gulf of Mexico were three notable examples.

Concern over red snapper populations in the Gulf of Mexico brought the shrimp trawl bycatch issue into focus and precipitated the development and implementation of the cooperative bycatch program. In 1989, a red snapper stock assessment revealed that the Gulf stock was at a very low level and that directed and incidental harvest would need to be severely restricted to allow for stock rebuilding. Notably, as mentioned above, data showed that over 80 percent of the fishing mortality on age 0 and age 1 red snapper was

attributed to shrimp trawling (Goodyear and Phares, 1990). Managers agreed that this source of mortality would have to be significantly reduced in order to rebuild red snapper stocks within the time frame established by the Gulf of Mexico Fishery Management Council (Gulf Council) without halting all directed commercial and recreational red snapper fisheries.

In 1990, the Gulf Council considered a 3-month closure of the Gulf shrimp fishery to protect juvenile red snapper. This proposal responded to concerns expressed by commercial and recreational red snapper fishermen who believed shrimpers needed to share the burden of regulations required to rebuild red snapper populations. However, subsequent analysis of the proposed closure (Nichols et al., 1990) indicated that it would likely have little benefit, particularly if shrimping effort shifted to other periods. This realization motivated the Gulf Council to begin searching for other management approaches that might be effective in reducing the bycatch of small juvenile red snapper in shrimp trawls. During these discussions, many parties raised concerns about the adequacy of shrimp bycatch estimates and the potential economic impacts that would likely result from proposed management measures.

Much progress has been made toward addressing and resolving many of the complex issues brought to the meetings in the early 1990s. The intermediate report submitted to Congress in April 1995 outlined the initial formation, development, and subsequent implementation of the shrimp trawl bycatch research program in the southeastern United States. That early report outlined the progress that had been completed up to that point. The report to Congress in October 1998 provided an update of the program accomplishments, displayed the significant research achievements, and discussed important findings in light of complex management issues. The present report is a major update on progress in this area during the subsequent 5 years.

4.0 NMFS BYCATCH RESEARCH PROGRAM

NMFS, acting on behalf of the Secretary, attempted to respond fully to the Congressional mandates (Appendix I) to conclude and summarize the incidental harvest research program initiated in 1992 (Section 405 (a)-(d)), to prepare a detailed report on those activities (Section 405 (e)), and to continue to monitor bycatch reduction status, improve technologies, implement management measures, and report status. In executing these tasks, NMFS emphasized the use of scientifically sound techniques and included multiple stakeholders in the research program.

First, priority attention has been given to ensure that the research program was scientifically sound in its design and implementation. To this end, NMFS' Southeast Regional Office (SERO) and Southeast Fisheries Science Center (SEFSC) jointly developed and published a document entitled *Shrimp Trawl Bycatch Research Requirements* (NMFS, 1991). This document established scientific protocols for conducting onboard shrimp trawl bycatch characterization research, developing and testing bycatch reduction devices (BRDs), and evaluating various bycatch management options. These protocols were subjected to peer review by an industry-organized panel of researchers and statisticians and, upon approval, became the scientific foundation of the bycatch research program.

Second, because the shrimp trawl bycatch issues are complex and have profound implications for numerous user groups, care was taken in the early development phases to involve all affected parties in the research program. To this end, NMFS entered into several cooperative agreements with the Gulf and South Atlantic Fisheries Development Foundation, Inc. (Foundation) to organize and utilize a 34-member Finfish Bycatch Steering Committee to guide the development and implementation of the bycatch research plan. Included on the Steering Committee were representatives of the commercial and sport fishing industries, the conservation community, state fishery management agencies, the Gulf and Atlantic States Marine Fisheries Commissions, the Gulf of Mexico Fisheries Management Council, the South Atlantic Fisheries Management Council, Sea Grant programs, universities, and NMFS. In addition, a 15-member Technical Review Panel and eight-member Gear Review Panel were established to advise the Steering Committee. Working together, these diverse groups developed and published *A Research Plan Addressing Finfish Bycatch in the Gulf of Mexico and South Atlantic Shrimp Fisheries* (Hoar et al., 1992). Throughout the bycatch research program, this document has been the keystone to the effort.

Third, following the implementation of the research plan, NMFS has not been working alone to collect and evaluate the scientific information provided in this report. Many diverse groups collected the onboard shrimp trawl bycatch data used for bycatch characterization and BRD evaluation. The stock assessment techniques and published conclusions have been peer-reviewed by Gulf of Mexico Fisheries Management Council stock assessment panels and many other national and local groups.

5.0 BRD Development Program Accomplishments

The first part of this section describes the methods used by the NMFS Southeast bycatch research program to develop gear technology and detailed performance estimates for the two BRD designs approved for implementation in the shrimp fishery in 1998. The second part of this section describes the results of more rigorous BRD certification tests performed from 1999 to 2003 and certification test results for 20 additional prototype BRD designs tested on commercial vessels during the same time period. Data collection methods, including observer programs, relevant to this section's discussion can be found in Appendix II.

5.1 Technological Devices to Minimize Bycatch

One of the objectives of the Southeast bycatch research program is to identify, develop, and evaluate gear options for reducing bycatch in the Gulf and south Atlantic shrimp Fisheries (NMFS, 1991). The research program called for gear modification studies to be conducted in inshore, nearshore, and offshore waters focusing on key FMP managed species (i.e., Gulf red snapper, Atlantic weakfish, king mackerel, and Spanish mackerel), and coordinated through a technical review panel (TRP). The TRP was responsible for selecting the best prototype gear modifications for commercial evaluation, monitoring testing in different shrimping areas, and prioritizing gear modification options for management consideration (Branstetter, 1997). The goal of the gear development project is to develop shrimp trawl gear modifications and or fishing tactics, capable of reducing the bycatch of finfish with minimum loss of shrimp production.

From 1990 to 1996, fishery researchers and the commercial shrimp industry, working under the auspices of the southeast regional bycatch program, developed and tested a total of 145 BRD designs. These evaluations were conducted under a research plan developed by the Foundation (Hoar et al., 1992) and a testing protocol developed by NMFS (NMFS, 1992). Operational testing for 16 BRD designs was conducted on commercial shrimp vessels by the Foundation, Georgia Department of Natural Resources (GDNR), the NMFS Galveston and Mississippi Laboratories, North Carolina Department of Marine Fisheries (NCDMF), Texas Shrimp Association, Texas A&M Sea Grant, and University of Georgia Sea Grant. These evaluations produced an extensive database consisting of over 3,400 tows, compiled by the NMFS Galveston Laboratory.

In June 1997, analyses of this database were conducted by the NMFS Mississippi Laboratories and a report submitted to the NMFS Southeast Fisheries Science Center and the NMFS Southeast Regional Office (Watson et al., 1997a). In August 1997, a peer-review of the available science on the status and management of red snapper in the Gulf of Mexico was conducted. The review process identified possible sources of bias in bycatch reduction and shrimp retention estimates for BRDs tested in the Gulf of Mexico. As a result of the peer-review, the data were re-analyzed in October 1997, using criteria which addressed these concerns (Watson et al., 1997b). The 1998 Report to Congress

presented the best estimates of the bycatch reduction potential for shrimp trawl BRDs evaluated as of December 1996.

5.1.1 Methods

The research plan (Hoar et al., 1992) identified a four-phase gear development program that included:

1. Initial design and prototype development – The full technical range of trawl design and modification approaches were identified. Industry techniques, ideas solicited from fishermen, net shop designs, and research studies conducted by various research groups were evaluated. Fish behavior, gear instrumentation, and gear performance studies were conducted on each design using SCUBA, remote video cameras, and other techniques. This work evaluated fish behavior and feasibility of prototype concepts. The results of this phase were subjectively evaluated based on the experience and expertise of the gear designer and research team. Operational data were collected on the modified net, and preliminary catch performance data obtained during comparative gear trials. The second phase of development was initiated once a design was determined to offer bycatch reduction potential and integrated into the construction of a net.

2. Proof of concept – Objectives during this phase were to evaluate prototype devices on key species, determine total finfish reduction rates, and establish shrimp catch rates. Proof of concept testing evaluated adequacy of design for safety and problems with operational use. Proof of concept testing was conducted under a specific scientific protocol developed under the *Shrimp Trawl Bycatch Research Requirements* (NMFS, 1991). The most successful designs were prioritized based on proportional bycatch reduction and shrimp retention and reviewed by a technical review panel for inclusion in operational evaluation by the commercial shrimping industry throughout the southeast.

3. Operational evaluation – The objective in this phase was to test the BRD/TED gear combination against a standard TED net under conditions encountered during commercial shrimping operations. Trained observers were placed aboard cooperating commercial vessels to collect data on both shrimp and finfish catch rates as well as species composition. BRD/TED combinations were tested on trawlers using the same TED employed in both the test and control gear. Testing was conducted over a wide range of geographic areas, seasons, and conditions.

4. Industry evaluation – Widespread commercial evaluations of approved BRD designs. Analyses of the data collected under the research plan were conducted to calculate reduction rate estimates for the different BRD designs for key species which are under existing or proposed management plans including; shrimp (weight), red snapper (number), Spanish mackerel (number), king mackerel (number), and weakfish (number). Reduction rate estimates were also calculated for total fish (weight), croaker (weight), spot (weight), and southern flounder (number), which are

predominant species or are considered economically important. Ratio estimation and testing procedures were used for statistical analyses (SAFMC, 1997). Data were partitioned by geographical area, south Atlantic statistical zones 29–36 and Gulf of Mexico statistical zones 8–21. A minimum of 30 tows was required for a gear design to be considered for analyses under the BRD certification protocol.

For BRDs that demonstrated a statistically significant overall reduction in red snapper bycatch, further analyses were conducted to determine estimates of reduction in fishing mortality (F) for red snapper based on reduction rate estimates by length frequency categories. Ratio estimates of reductions by 20 mm size classes were calculated.

Estimates of reduction of F for each gear were calculated from the VPA analyses and the monthly size composition data of Goodyear (1995), using software that Goodyear provided. Ranges of reduction estimates of F reported were based on natural mortality (M) values at age 0 of 0.4 to 2 per year.

5.1.2 Results

The operational test results for 16 BRD designs were presented in the 1998 Report to Congress. Of the 16 devices tested the 12x5 fisheye BRD placed 30 meshes behind the front of the trawl codend (30 mesh position), the 12x5 fisheye BRD placed 5 meshes behind the front of the trawl codend (5 mesh position) (Figure 1), and the Jones-Davis BRD (Figure 2) were the only designs that met the bycatch reduction criteria for red snapper reduction in the Gulf of Mexico. The best overall reduction rates were demonstrated by the 12x5 (30 mesh) fisheye BRD, the extended funnel BRD (Figure 3), and the Jones-Davis device. Additional detailed species-specific and BRD design-specific reduction rates can be found in NMFS 1998b.

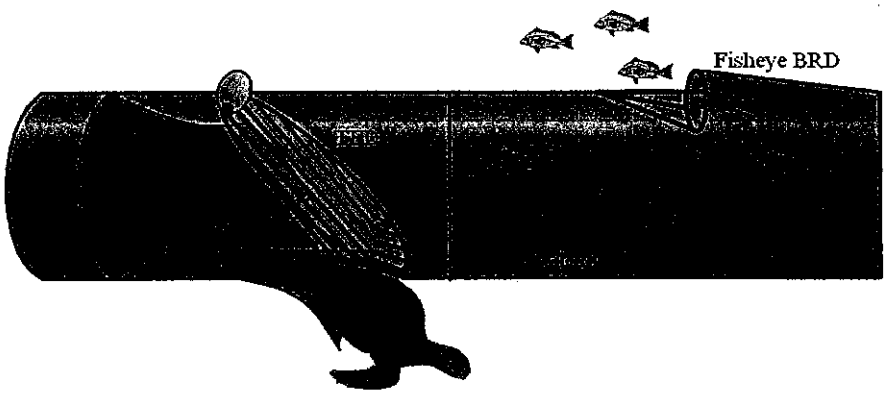

Figure 1. Fisheye BRD.

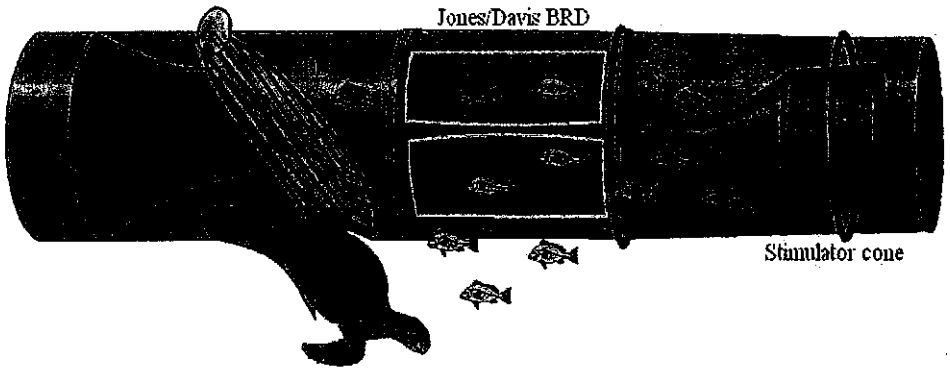

Figure 2. Jones-Davis BRD.

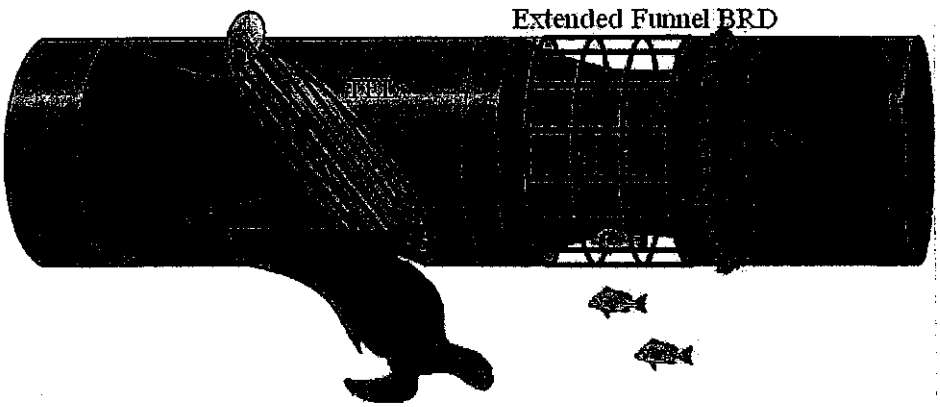

Figure 3. Extended funnel BRD.

5.1.3 Monitoring BRD Effectiveness

In 1998, the fisheye, and the Jones-Davis BRD were approved for implementation in the Gulf of Mexico under Amendment 9 to the FMP for the shrimp fishery. These BRD designs were certified for use in the Gulf of Mexico shrimp fishery based on criteria for the reduction of red snapper bycatch achieved during the cooperative industry/government research effort (1992–1997).

During the summer of 1998 an intensive short-term observer program, referred to as the Red Snapper Initiative, was conducted by the NMFS Southeast Fisheries Science Center to provide data on the effectiveness of mandatory use of BRDs by the commercial shrimp fishery in the north central and western Gulf of Mexico. (Appendix II describes data collection methods, including observer programs, for bycatch characterization and BRD certification efforts in the U.S. Gulf of Mexico.) The research efforts initiated during the summer of 1998 were the result of three distinct, but interrelated events. The first event

was the release of a 9.12 million pound total allowable catch (TAC) for the red snapper fishery in the Gulf of Mexico by the Gulf Council. The second event was the implementation of Amendment 9 to the Shrimp FMP by the Council, requiring the use of BRDs on all shrimp vessels in certain areas of the Gulf of Mexico. The third event, held during the summer of 1997, was the congressionally mandated peer review on the science and management of the Gulf of Mexico red snapper fishery.

In February 1998, the Gulf Council submitted a regulatory amendment to the reef fish FMP which proposed to maintain the red snapper TAC at 9.12 million lb (4.14 million kg). In making this recommendation, the Gulf Council considered advice from a 1997 congressionally mandated peer review of the science and management of red snapper, an October 1997 updated stock assessment for red snapper prepared by NMFS, and the Gulf Council's Reef Fish Stock Assessment Panel (RFSAP). In part, this advice was that the TAC be reduced to no more than 6.0 million lb (2.7 million kg) for the 1998 fishing year, in order to recover to a spawning potential ratio (SPR) of 20 percent by 2019. The Gulf Council based its decision to maintain the red snapper TAC at 9.12 million lb (4.14 million kg) on an assumed bycatch reduction in mortality of at least 60 percent for juvenile red snapper, phased in over a 3-year period, and updated BRD performance information which showed that bycatch reduction levels of 59 percent and above were achievable with fisheye BRDs. The peer review and RFSAP, on the other hand, had assumed reduction levels closer to 50 percent based on advice from NMFS gear specialists. At the higher, phased-in bycatch reduction level, modeled projections had demonstrated that the target 20 percent SPR could be achieved by 2019 while maintaining TAC at 9.12 million lb (4.14 million kg). These bycatch reductions were to be achieved through the use of BRDs in the Gulf of Mexico shrimp fishery as required under regulations implementing amendment 9 to the Gulf Council's Shrimp FMP. At the time the Gulf Council issued its regulatory amendment, the requirement for BRDs had not been implemented. The requirement for BRDs, however, was implemented May 14, 1998 (63 FR 18139, April 14, 1998). On April 14, 1998, NMFS published an interim rule (63 FR 18144) which left the 9.12 million-lb (4.14 million-kg) TAC for 1998 unchanged, but held 3.12 million lb (1.42 million kg) in reserve. The reserve was to be released all, or in a prorated portion, on September 1, 1998, if a research study conducted during the summer of 1998 was able to demonstrate that BRDs could achieve reduction levels between 50 and 60 percent after adjustment for compliance, BRD release mortalities, and lack of compatible regulations in state waters. Thus, each of the short-term, time critical, research projects had a goal to help determine the overall fishing mortality (F) reduction to the red snapper stock because of BRD implementation in the shrimp fishery. The time critical (BRD Evaluation) research effort was divided into four research projects: 1) BRD Performance, 2) BRD Exclusion Mortality, 3) BRD Compliance, and 4) BRD Overall Effectiveness.

The objective of the short-term intensive 1998 observer project was to collect data on BRD performance within the shrimp fleet subsequent to mandatory requirements. The research plan called for 1,900 sea days of observation aboard as many as 100 randomly selected commercial shrimp trawlers in the Gulf of Mexico EEZ during May 15 through August 15. The projected 1,900 observer days would yield

approximately 7% coverage of the estimated total fishing days in the EEZ, between statistical areas 10–21, during this 4-month time period.

Because it was not possible to place observers randomly on vessels, estimation of the reduction capability of the fleet is not statistically defensible, i.e., only applicable to the boats sampled. The observer data was analyzed by BRD type among vessels, and within vessels with at least 20 tows which contained red snapper and shrimp in order to evaluate the performance potential of the BRDs.

At the time of the project there were no shrimp permits required in the Gulf of Mexico. Although state license files existed, these registered vessels could fish in the inshore (bays, sounds, and estuaries), nearshore (COLREG line out to 10 fm), or offshore (>10 fm) waters. Landing files by documented vessels were available from the shrimp database (i.e., vessel number and landing information). From this information, a determination relative to which vessels fished in the Gulf of Mexico between statistical areas 10–21 (Alabama to the Texas/Mexico boarder) in the offshore zone in a particular month was possible. General information from the shrimp data file is summarized in Table 1.

Table 1. Detailed shrimp fishing information for the Gulf of Mexico 1998 study, Subareas 10-21, >10 fm.

Parameter	May	June	July	August
Trips	1246	567	2201	2211
Unique Vessels	499	313	1118	1155
Average Days Out	14.88	22.17	16.47	15.63
Percent Trips	20.01	9.11	35.36	35.52
Stratification of Sampling Days by Trips	380.31	173.06	671.79	674.84
Number of Vessels for Observers	26	8	41	43

From this table the percent effort allocation of the sampling sea days was determined on a monthly basis. Sampling of the vessels (i.e., allocation of the 1,900 sea days) was stratified with these percentages in mind. Vessels with a past history for fishing in a particular month in the offshore area were randomly selected for observer placement.

Letters were sent in mid-May 1998, to 100 randomly selected vessel owners requesting that they make their vessels available for observer placement. From this initial list, only

one positive response was received approximately 3 weeks after the letters were mailed. A variety of reasons (e.g., insurance, inadequate accommodations) were given from owners that said that they would not put an observer on the vessel. No matter the reasons, vessels were not available for observer placement for data collection using random placement.

The inability to randomly place observers on vessels was one of the major reasons we recommended that a mandatory observer program be initiated in the future. Without the ability to randomly select a vessel for observer placement, only those willing to participate would be sampled, and the results may not be representative of the fishery as a whole.

Because of the difficulty with voluntary observer placement, a vessel chartering program was initiated. The first group of vessels contacted for inclusion in the charter program were the vessels that were randomly selected, thus trying to maintain the integrity of the initial random data collection program. Once the randomly selected vessels were contacted, other vessels not from the random list were ***given the opportunity*** to take an observer. Inshore, participating vessels may not be representative of the vessels in the fishery as a whole. Thus, conclusions with regards to total reduction in F on the red snapper stock from the shrimp trawl fishery were problematic.

Reduction rate estimates were calculated for age 0 and age 1 snapper counts, and total shrimp weights. Data criteria included only trips that used outside nets as control and experimental nets, and only trips that alternated control and experimental nets.

Ratio estimation and hypothesis testing procedures were used for statistical analysis. The ratio estimate for the overall bycatch reduction for each BRD type was computed by expressing the difference between the average CPUE per tow of the control and experimental trawl (control minus experimental) as a percent of the average CPUE per tow of the control trawl. This is equivalent to subtracting the ratio of the two average CPUE values (experimental over control) from 1 and multiplying the difference by 100. Point estimates and 95% confidence intervals (computed through ratio estimation approach) are reported for various BRDs for the total data set and by individual vessels. Data were analyzed for the Fisheye BRD in three different positions, ahead of the elephant ear, under the elephant ear, and behind the elephant ear (Figure 4). The fisheye data were analyzed by different positions to determine if performance was related to position.

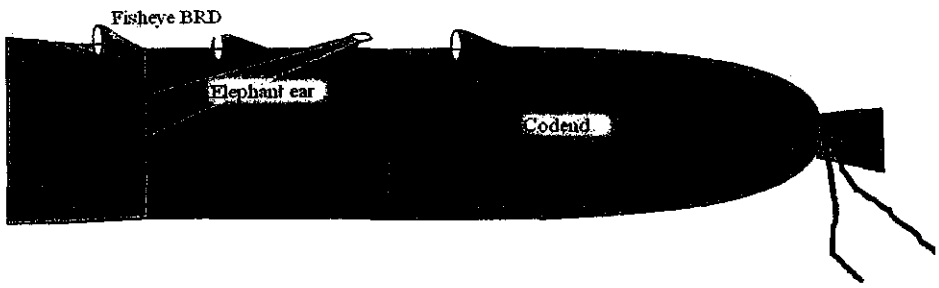

Figure 4. Fisheye position relative to elephant ear.

The point estimate for age 1 red snapper reduction for the Jones/Davis BRD was 69%, (P-value 0.00) with a 95% confidence interval of 63–76%. The point estimate for shrimp reduction was 9% (P-value 0.00) with a 95% confidence interval of 6–12%.

The point estimate for the fisheye BRD placed ahead of the elephant ear for age 1 red snapper reduction was 42% (P-value 0.00) with a 95% confidence interval of 29–55% . The point estimate for shrimp reduction was 6% (P-value 0.00) with a 95% confidence interval of 3–9%. For age 0 red snapper the point estimate was 30% (P-value 0.91) with a 95% confidence interval of 0% to 59%.

The point estimate for the fisheye BRD placed under the elephant ear for age 1 red snapper reduction was 25% (P-value 0.00) with a 95% confidence interval of 16–34% The point estimate for shrimp reduction was 4% (P-value 0.00) with a 95% confidence interval of 2–5%.

The point estimate for the fisheye BRD placed behind the elephant ear for age 1 red snapper reduction was 47% (P-value 0.00) with a 95% confidence interval of 33–60%. The point estimate for shrimp reduction was 7% (P-value 0.00) with a 95% confidence interval of 2–12%.

The estimates of red snapper and shrimp reduction for the Jones-Davis and fisheye BRDs were estimates from the assemblage of vessels and gear involved in the observer program. In order to estimate the overall impact of BRDs for the fleet, NMFS made the assumption that the sample of vessels was representative of the fleet. Because it was not possible to place observers randomly on shrimp vessels in the fleet, this assumption was not statistically defensible. NMFS estimated the maximum potential of BRD performance from individual vessel performance and variation in performance between vessels.

As expected, the overall snapper reduction and shrimp retention achieved from the vessels sampled was lower than the rates achieved during the development of BRDs. Historically the effective implementation of new technology into the fishing fleet requires a minimum of 3 to 5 years. This is due to the inexperience of the captains and crews with the gear and operational problems associated with widespread use of new technology over the wide range of gear types, configurations, and fishing conditions. Optimizing gear performance requires identifying and solving operational problems and modifying gear and techniques to maximize performance.

Possible factors associated with fisheye BRD performance differences identified by gear technologists included codend length, location of bag tie rings, location of elephant ear, length of elephant ear, and circumference of codend. Operational characteristics included length of tow, total catch size, towing speed, vessel characteristics, trip characteristics, and haulback procedures. Texas A&M and Georgia Sea Grant specialists working with shrimpers implementing BRD technology in 1998 identified several factors affecting BRD shrimp retention performance, and shrimpers developed techniques to minimize the effect of these factors. The factors identified include towing speeds, winch retrieval speed, codend length, frequent vessel turning, strong tides, debris and jellyfish, use of choker straps, fisheye placement, and rough weather.

The Jones-Davis BRD reduced age 1 snapper by an estimated 63–76% with a shrimp reduction estimate of 6–12% for the vessels sampled. Based on the performance of individual vessels, the estimated maximum potential for this gear was 57–78% reduction in age 1 snapper with a 0–10% estimated shrimp reduction.

For the Fisheye BRD placed in the codend ahead of the elephant ear the estimated age 1 red snapper reduction was 29–55% with a shrimp reduction of 3–9% for the vessels sampled. The estimated maximum potential for this gear based on the performance of individual vessels was 9–65% reduction for age 1 red snapper with a shrimp reduction of 0%.

For the Fisheye BRD placed in the codend under the elephant ear the estimated age 1 red snapper reduction was 16–34% with a shrimp reduction estimate of 2–5% for the vessels sampled. The estimated maximum potential for this gear based on the performance of individual vessels was 22–40% reduction for age 1 snapper with a shrimp reduction of 0%.

For the Fisheye BRD placed in the codend behind the elephant ear the estimated age 1 red snapper reduction was 33–60% with a shrimp reduction estimate of 2–12% for the vessels sampled. The estimated maximum potential for this gear based on the performance of individual vessels was 30–61% reduction for age 1 snapper with a shrimp reduction of –1% to 11%.

Snapper reduction estimates between the three fisheye positions for snapper >100 mm in length were tested to determine if the difference in reduction rates by position were statistically significant. Using asymptotic normality for the distribution of reduction rates,

bias between the inside nets associated with try-nets. Both the control and experimental nets were also required to have identical turtle excluder devices (TED) installed.

Data collection was conducted following procedures described in the *Gulf of Mexico Bycatch Reduction Device Testing Protocol Manual* (NMFS, 1999). After each tow, observers inspected the gear for equipment malfunctions (i.e. torn or bogged gear) that would bias the evaluation of the BRD. The catches from the outboard nets were partitioned on deck. Each catch was mixed to ensure homogeneity, then shoveled into baskets and weighed. A sub-sample of approximately 32 kg was collected from each test net. Counts and weights were obtained for 20 pre-selected species (or taxa) of finfish. The rest of the sub-sample was separated into categories and weighed (i.e. other finfish, non-shrimp crustaceans, other non-crustacean invertebrates, and debris). Shrimp and red snapper were collected from the entire catch. Length frequency data (to the nearest mm fork length) were collected on all red snapper caught.

Data for all successful tows were analyzed to calculate reduction rate estimates for total shrimp weight (*Farfantepenaues sp.* and *Litopenaeus setiferus)*, total fish weight and red snapper fishing mortality (F). For each taxon, successful tows were replicates with no operational problems (except those relating to the BRD) and at least one individual occurring in one of the two test nets. The ratio estimate for bycatch and shrimp reduction was computed by expressing the difference between the average CPUE (catch/hr) per tow of the control and experimental trawl (experimental over control) from 1 and multiplying the difference by 100. Point estimates and 95% confidence intervals (computed through ratio estimation approach) are reported. The statistical inference on estimating the reduction in red snapper fishing mortality (F) is described in Nichols, 1999. The ratio estimate for numerical reduction was calculated for two size classes of red snapper approximating age 0 and 1 (< 130mm FL, ≥ 130 mm). A weighted average of reduction for the two size classes (30% and 70% respectively) is used as an approximation of reduction in F.

5.2.1.1 Industry Performance with Certified BRDs

NMFS-approved observers were placed on cooperating shrimp vessels from 1999 to 2003 to evaluate BRD performance during commercial trawling operations. Fishing practices and trawling locations were determined by vessel operators. The BRDs evaluated were provided by the vessels. Fisheye construction, installation methods and locations were configurations being used by the vessel prior to the study. Fisheyes were installed in both test nets. However, the fisheye in one of the outboard nets (control net) was disabled by sewing a piece of codend webbing across the escape opening of the BRD. Fisheye configurations (i.e., enabled or disabled) were periodically alternated to control for possible net and/or side bias. Information was recorded on vessel characteristics as well as trawling gear prior to each trip. Observers documented BRD construction and installation materials, escape opening dimensions, installation distance from tie off rings, and placement in lazy-line attachment system. For each tow, vessel position, depth, bottom time, and towing speed were documented.

Due to the low number of tows observed with Gulf Fisheyes in the region around 8.5 ft. from the codend tie-off rings, in 2003 a small number of vessel operators were asked to voluntarily install the fisheyes between 8.5 ft. and 9.0 ft. from the codend tie-off rings. The data set contains three trips where the fisheye was moved. These trips are not reflected in the overall results. A note occurs in the results where the data from the three trips have been added for the analysis of fisheye installation position.

NMFS used the following criteria for the analysis of data collected under the Red Snapper Initiative project:

- Paired tows with a functional BRD in the experimental net and a disabled or no BRD in the control net.
- Successful tows (tows with no non-BRD related problems).
- Red snapper analysis (tows with at least one snapper in one of the two test nets).

5.2.1.2 BRD Certification

NMFS and the Gulf and South Atlantic Fisheries Foundation, Inc. (Foundation) conducted BRD certification tests on commercial vessels to evaluate performance of new prototype BRDs. Procedures and sampling protocol were the same as those previously mentioned. However, the current analysis deviated from the criteria found in the 1999 Protocol Manual (NMFS, 1999) in that the protocol requires that tow times not vary more than 10% from a selected tow time. Certification tests of some prototype BRDs designs took place over a range of seasons and years, making adherence to 10% tow time criteria of the protocol impractical.

NMFS used the following criteria for data analysis in BRD certification testing:

- Paired tows with a functional BRD in the experimental net and a disabled or no BRD in the control net.
- Successful tows (tows with no non-BRD related problems).
- Red snapper analysis (minimum of 30 tows with at least 5 snapper in one of the two test nets).
- Tow times from 2 to 8 hours in duration.

5.2.2 Results

5.2.2.1 Industry Performance with Certified BRDs

All of the vessels selected for the Red Snapper Initiative Project chose to use the Gulf Fisheye BRD. A total of 4,089 tows from 32 vessels had been archived in the regional bycatch database by February 13, 2003. Of those, 2,202 tows met the criteria for analysis.

The overall results for the Gulf Fisheye are presented in Table 2.

Table 2. Shrimp, total fish, and snapper F reduction for the Gulf Fisheye.

Species	n	Reduction rate (%)	95% C.I.
Shrimp	2190	2.0	1.1 – 2.9
Total Fish	2089	16.5	15.2 – 17.8
Red Snapper	1226	11.7	4.3 – 19.1

Red snapper F reduction estimates for vessels, which had at least 30 tows containing snapper, are presented in Figure 5.

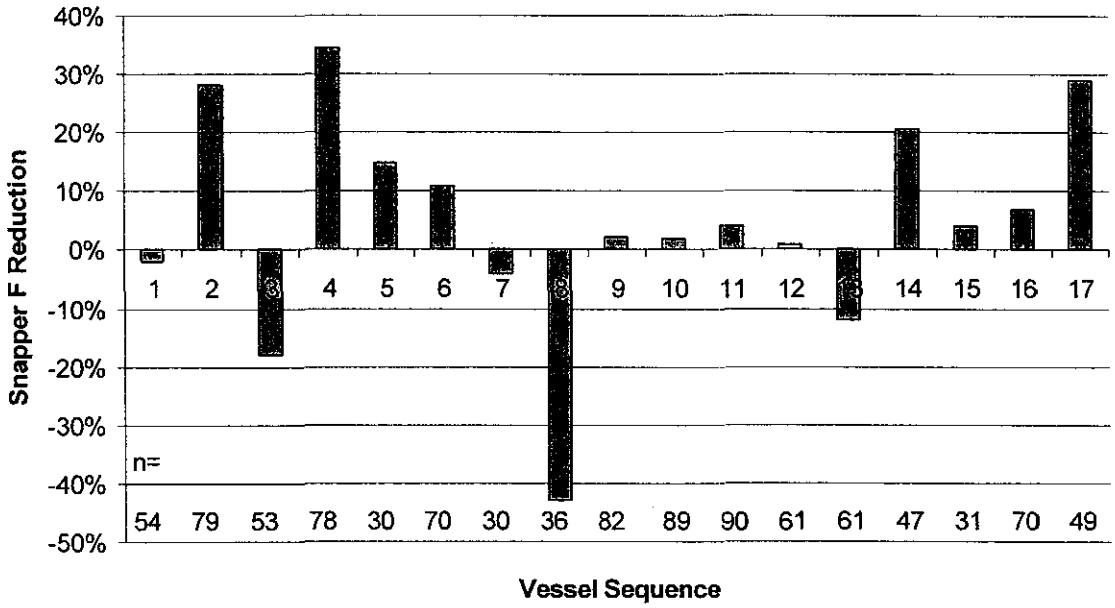

Figure 5. Gulf Fisheye red snapper F reduction by vessels with greater than 30 tows containing snapper.

Documentation of Gulf Fisheye configurations indicate that 75% of the fisheyes used had illegal configurations. The determination of whether a fisheye was legal or illegal was based on three criteria: distance from tie-off rings, placement in relation to codend retrieval system (elephant ear), and minimum dimensions of the escape opening. Federal regulations require that the fisheye be installed in the codend between 8.5 and 12.5 feet from the tie-off rings (Federal Register, 1999) (Figure 6). Twenty-five percent of the documented tows had fisheyes outside of the legal area. The majority of the fisheyes with illegal distances from the rings were forward of the legal area, with 23.2% installed at a distance greater than 12.5 feet. Federal regulations state that when the fisheye is installed behind the attachment point of the codend retrieval system, no part of the lazy-

line attachment system may overlap the fisheye escape opening (Figure 7). Of the tows documented, 61.9% had fisheyes overlapped by the lazy-line attachment system.

Data for the Gulf Fisheye for legal and illegal configurations are presented in Tables 3 and 4.

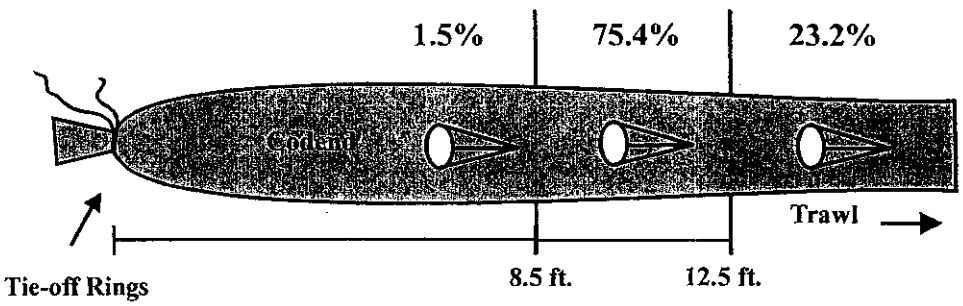

Figure 6. Percentage of tows occurring behind, between, and forward of the allowed installation range of 8.5ft. to 12.5ft. from the codend tie-off rings.

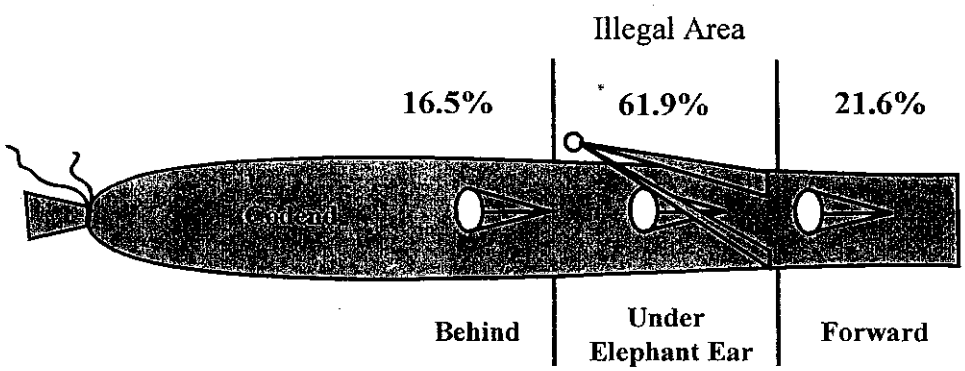

Figure 7. Percentage of tows occurring behind, under the elephant ear, and forward of the elephant ear region of the codend.

Table 3. Shrimp, total fish, and red snapper F reduction for Gulf Fisheyes fished in a legal configuration.

Species	n	Reduction rate (%)	95% C.I.
Shrimp	535	3.5	1.7 – 5.3
Total Fish	522	15.3	12.6 – 17.9
Red Snapper	327	13.2	0.0 – 27.1

Table 4. Shrimp, total fish, and red snapper F reduction for Gulf Fisheyes fished in an illegal configuration.

Species	n	Reduction rate (%)	95% C.I.
Shrimp	1552	1.6	0.1 – 2.6
Total Fish	1468	16.8	15.3 – 18.4
Red Snapper	823	13.2	4.5 – 16.9

In order to compare the results of the current study to the 1998 project, an analysis of snapper (age 1) reduction was conducted for the fisheye in the 8.5 to 12.5 ft position when installed ahead of the elephant ear, under the elephant ear, and behind the elephant ear. The estimated reduction rates and 95% confidence intervals for the 01-03 study and the 1998 study are presented in Figure 8. The point estimates for the 01-03 period are 31.1% for the fisheyes behind the elephant ear, 9.7% when fished in the zone under the elephant ear and –16.8% (increase) in the position ahead of the elephant ear. The results from the 1998 study were 47%, 25%, and 42% respectively. As shown in the figure, the point estimates for the current study in all three positions are lower than the estimates achieved in 1998. The most dramatic difference occurs at the position forward of the elephant ear.

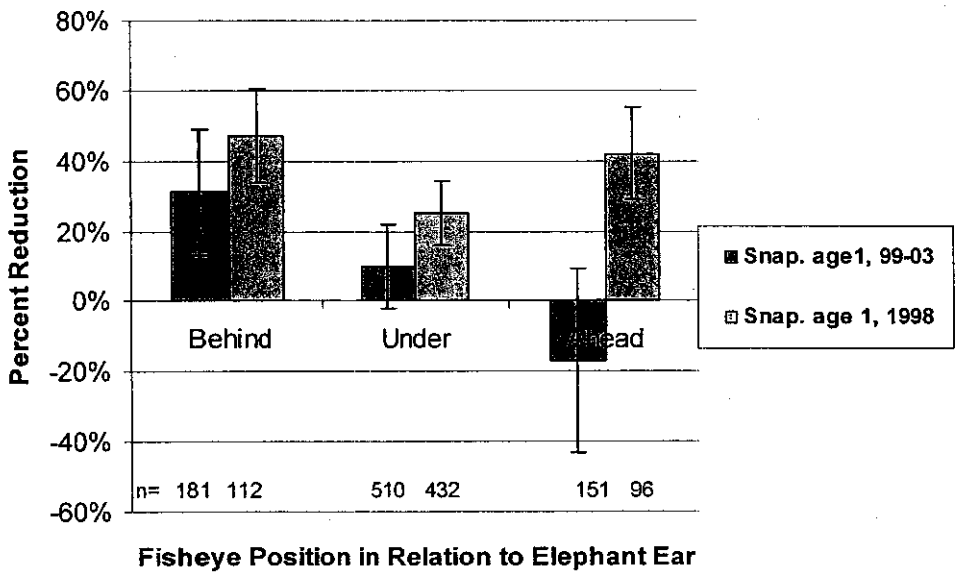

Figure 8. Fisheye reduction rates for red snapper and shrimp for fisheye between 8.5 ft. and 12.5 ft. from the tie-off rings as fished ahead, under, and behind the elephant ear.

An analysis was conducted comparing snapper and shrimp reduction rates for fisheyes, not impeded by the elephant ear, placed in the codend in the 8.5 ft.–10.5 ft. position and 10.6 ft.–12.5 ft. from the tie- off rings. The point estimates and 95% confidence intervals for shrimp and red snapper are presented in Figure 9.

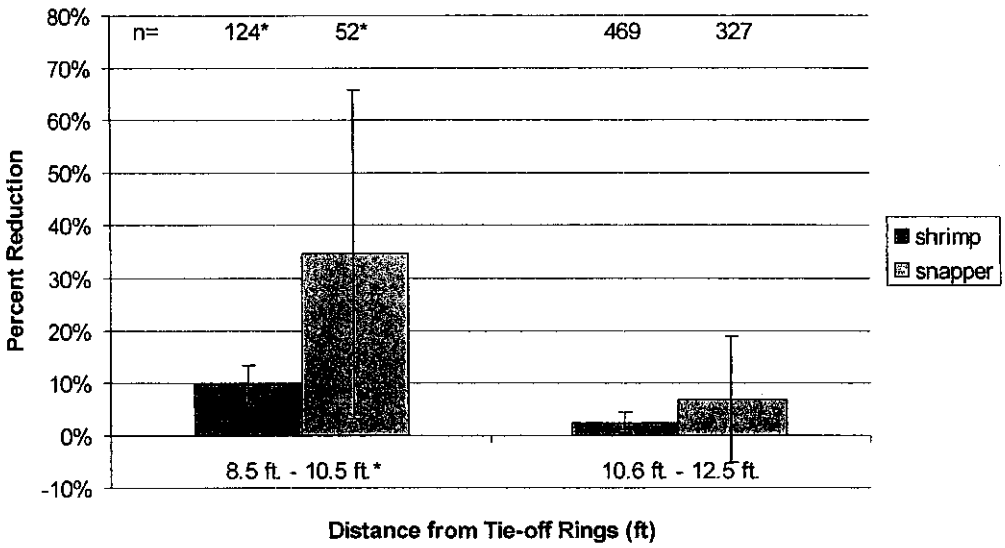

* Includes three additional commercial trips where NMFS specified installation at the 8.5 to 9.0 ft. position (see Methods section).

Figure 9. Reduction rates for snapper and shrimp for legal fisheyes installed in the 12.5 ft. to 10.6 ft. positions and the 10.5 ft. to 8.5 ft. positions.

5.2.2.2 BRD Certification Tests

Twenty prototype BRD designs were tested on commercial vessels between 1999 and 2003. The BRD types and total number of paired tows completed are presented in Table 5.

Table 5. Bycatch reduction devices (BRDs) tested under the regional bycatch program 1999–2003 (February 2003 analysis).

Organization	BRD Type	Total Tows
NMFS Galveston	Modified Jones-Davis	500
Foundation	Sea Eagle II	195
Foundation	Coulon TED	194
Foundation	Double Opposed Fisheye	184
Foundation	Mod. Fisheye in Mesh Tunnel	110
NMFS Galveston	Fish Box	88
NMFS Galveston	Extended Funnel	70
NMFS Galveston	Hickman III	65
NMFS Galveston	Fish Tube	61
Foundation	Jones-Davis w/ Double Hoop	60
Foundation	Jones-Davis w/ fisheye on bottom	53
NMFS Galveston	Modified Fish Box	53
Foundation	Dubberly TED	31
NMFS Galveston	Side Opening Grid 5	16
NMFS Galveston	Split Ring	15
NMFS Galveston	Side Opening Grid 1	11
NMFS Galveston	Side Opening Grid 2	4
NMFS Galveston	Side Opening Grid 3	2
NMFS Galveston	Side Opening Grid 4	2
Foundation	C. J. Keiffe	2

Data Criteria: Paired tows with a functional BRD in the experimental net and a disabled or no BRD in the control net; successful tows (tows with no non-BRD related problems); red snapper analysis (minimum of 30 tows with at least 5 snapper in of the two test nets); tow times from 2 to 8 hours in duration

While 13 designs had more than 30 completed tows, only 6 BRD designs had 30 successful tows with the minimum number of snapper needed to be considered for certification tests. The results of the BRD performance analysis are summarized in Tables 6–11. Results presented in the Tables appear in descending order of performance based on red snapper F reduction point estimates. The devices with complete certification tests are the Jones-Davis with a Double Hoop, Modified Jones-Davis, Fish Box, Double Opposed Fisheye, Modified Fish Box, and the Hickman III.

Table 6. Reduction rate estimates for the Jones-Davis with a Double Hoop.

Species	n	Reduction rate (%)	95% C.I.
Shrimp	34	3.8	0.4 – 7.4
Total Fish	32	43.9	39.4 – 48.4
Red Snapper	32	57.3	53.5 – 61.1

Table 7. Reduction rate estimates for the Modified Jones-Davis.

Species	n	Reduction rate (%)	95% C.I.
Shrimp	322	3.8	1.7 – 5.9
Total Fish	379	33.5	31.1 – 35.9
Red Snapper	220	29.4	23.3 – 35.4

Table 8. Reduction rate estimates for the Fish Box.

Species	n	Reduction rate (%)	95% C.I.
Shrimp	49	1.2	-1.4* - 3.9
Total Fish	20	28.0	21.8 – 34.1
Red Snapper	35	23.8	15.2 – 32.4

* Negative values represent an increase

Table 9. Reduction rate estimates for the Double Opposed Fisheye.

Species	n	Reduction rate (%)	95% C.I.
Shrimp	74	1.2	-3.5* – 5.9
Total Fish	53	12.9	6.4 – 19.3
Red Snapper	37	19.3	8.7 – 22.2

* Negative values represent an increase

Table 10. Reduction rate estimates for the Modified Fish Box.

Species	n	Reduction rate (%)	95% C.I.
Shrimp	37	4.1	1.4 – 6.9
Total Fish	5	21.7	-10.8 – 54.2
Red Snapper	36	18.3	4.3 – 32.2

* Negative values represent an increase

Table 11. Reduction rate estimates for the Hickman III.

Species	n	Reduction rate (%)	95% C.I.
Shrimp	46	7.7	4.0 – 11.4
Total Fish	36	15.5	8.0 – 23.0
Red Snapper	33	0.4	-20.7* – 21.5

* Negative values represent an increase

Three prototype BRD designs tested had 20 to 29 tows with the required number of snapper. To evaluate the potential for further testing, the results of performance analysis for these BRDs are summarized in Tables 12–14. Results presented in the Tables for the Jones-Davis with a fisheye on bottom, Fish Tube, and Extended funnel appear in descending order of performance based on red snapper F reduction point estimates.

Table 12. Reduction rate estimates for the Jones-Davis with a Bottom Fisheye.

Species	n	Reduction rate (%)	95% C.I.
Shrimp	29	16.6	10.0 – 23.1
Total Fish	30	69.4	40.6 – 98.2
Red Snapper	29	42.4	33.6 – 51.2

Table 13. Reduction rate estimates for the Fish Tube.

Species	n	Reduction rate (%)	95% C.I.
Shrimp	27	3.1	-1.8* - 7.9
Total Fish	0	-	-
Red Snapper	27	36.1	24.9 – 47.3

* Negative values represent an increase

Table 14. Reduction rate estimates for the Extended Funnel.

Species	n	Reduction rate (%)	95% C.I.
Shrimp	23	-0.8*	-5.3* – 3.5
Total Fish	28	37.3	30.2 – 44.4
Red Snapper	20	17.8	-8.0* – 43.4

* Negative values represent an increase

5.2.3 Discussion

Research conducted from 1990 to 1996 under the auspices of the regional bycatch program produced two BRD designs that demonstrated potential to reduce shrimp bycatch of juvenile red snapper. The Jones-Davis device demonstrated potential to reduce juvenile snapper mortality 52% to 67%. For the Gulf Fisheye BRD, the estimate reduction in juvenile snapper mortality ranged from 59% to 77% (Watson et al, 1997).

In 1998, under the Red Snapper Initiative Project, research was conducted to provide data on the effectiveness of mandatory use of bycatch reduction devices by the commercial shrimp fishery in the north central and western Gulf of Mexico (Watson et al, 1999b). The 1998 results for the Jones-Davis BRD were similar to previous research in that the point estimate for the reduction of age class 1 snapper was 69%. However, the results for the Gulf Fisheye BRD were lower than expected. The analysis indicated that placement of the fisheye in the area immediately behind the elephant ear attachment point had the potential to impede fish escapement. The estimated reduction of age 1 snapper in the area of the elephant ear was only 25% as opposed to 42% ahead of the elephant ear and 47% behind the area of the elephant ear. As an attempt to improve fisheye performance, the federal regulations were amended in 1999 to require fisheyes be place in the codend in an area away from the elephant ear (Federal Register, 1999).

The 2001–2003 data indicate that the 1999 regulation amendment has had little effect on fishing practices since 1998. In 1998, the percentage of tows occurring behind the elephant ear was 13%. The percentage occurring in the zone of (under) the elephant ear was 67% and the percentage occurring ahead was 19%. In the 2001–2003 study the results were 17%, 62%, and 22%, respectively. Even though a large percentage of tows made were with fisheyes installed in an illegal configuration, a comparison of results between legal and illegal fisheyes indicate that even legally placed fisheyes performed poorly.

One of the more important differences between the 1998 study results and the 2001–2003 data involved the red snapper reduction rate forward of the elephant ear. In the 1998 study, the estimated red snapper reduction rates for age 1 snapper for fisheyes installed forward of the elephant ear was 42%. The point estimate for snapper age 1 reduction for the 2001-2003 results was –17% (increase) with the upper end of the 95% confidence interval at 7% reduction. It is not clear what factors or changes in fishing practices may have precipitated these results. However, video observations of fish behavior associated with fisheyes indicate a large portion of snapper escapement occurs at the surface during haulback (Workman, 1999). Observations also indicate that the portion of escapement that occurs at the surface is highest when the fisheye is installed in the forward position. When the fisheye is installed farther back toward the tie-off rings, more snapper escape during the tow. Video observation of shrimp behavior and fisheyes obtained by Texas A&M and Georgia Sea Grant specialists indicates that the majority of shrimp loss also occurs at the surface during haulback. This information suggests that any operational efforts to reduce shrimp loss with fisheyes during haulback may have an adverse impact on snapper reduction. In this case, the potential negative impact on fish reduction would be highest for the fisheye installed in the forward position. Observations of the Jones-Davis BRD indicate that the majority of juvenile escapement occurs during the tow.

The intrinsic relationship between shrimp loss and finfish reduction with the Gulf Fisheye BRD is the likely cause of the decrease in finfish reduction performance since the mid-1990s. Potential variables identified by gear technologists that could affect fisheye BRD performance include codend length, location of bag tie-off rings, location of the elephant ear, length of the elephant ear, circumference of the codend, and knot orientation of the codend. Fishing practices identified include towing speeds, winch retrieval speed, codend hauling procedures, hauling direction, and frequent turning. The economic incentive for the fishery is to utilize these factors in such a way as to maximize shrimp production. With the number of parameters potentially affecting Gulf Fisheye performance, determining the optimal configuration for finfish reduction is problematic. Even if such a configuration could be determined, mandating fishing activities such as hauling procedures would be impractical.

6.0 Ongoing Efforts to Further Reduce Bycatch

6.1 Research Efforts to Develop Improved BRD Designs

In 1990, the Harvesting Systems and Engineering Division of NMFS Mississippi Laboratories initiated studies to evaluate existing commercial bycatch reduction device designs and assist the industry in the development of improved trawl modification capable of reducing finfish bycatch without significantly impacting shrimp capture efficiency. In 1992, a broad-scoped Regional Research Program was established in the Southeast Region as a cooperative partnership between industry, federal and state agencies, and academia to address the problem of bycatch in shrimp trawls and seek workable solutions. One hundred forty-five conceptual designs for bycatch reduction contributed by fishermen, net shops, gear technicians, and biologists were evaluated between 1990 and 1997. These evaluations included observations of fish behavior, video documentation of operational characteristics, water flow measurements, and delineation of water flow patterns associated with bycatch reduction designs (Watson et al., 1993). This research resulted in certification of two BRDs designs—the Gulf Fisheye and the Jones-Davis BRD—under Amendment 9 for use in the Gulf of Mexico shrimp fishery.

The development of effective bycatch reduction technology is dependent on the knowledge of fish behavior. One of the greatest impediments to using fish behavioral observations to develop BRDs for use in the Gulf of Mexico is the fact that the majority of commercial shrimping operations occur during night conditions. Lacking a better alternative, observations have been obtained either during daylight conditions or by using artificial lighting in trawls. However, research by Wardle (1986) using flash photography under very low light conditions suggests that night behavior differs from typical patterns of behavior shown in daylight. Research conducted by Ruggles and Ryan (1964) indicates that exposing dark-adapted fish to artificial lights can alter fish behavior in relation to gear. These observations accentuated the need to develop methods for observing fish behavior under night trawling conditions.

In the past, scientists have been successful in using infrared lights and video cameras that are sensitive to infrared light in laboratory conditions to observe fish behavior under darkness (Batty, 1983; Olla and Davis, 1990; Ryer and Olla, 1998; Fuiman and Delbos, 1998). However, this technology has been difficult to apply underwater and has only been employed a few times (Matsuoka et al., 1997; Olla et al., 2000). Recent advances in the technology of ultra-bright infrared LED lights and low-light CCD video cameras have made the use of infrared lights a simple and cost-effective means of observing fish behavior in night trawling conditions.

Since the initial development phase of the Regional Bycatch Program from 1990 to 1996, the Harvesting Systems and Engineering Division has made many advances in our understanding of fish behavior in trawls. There have also been major advances in our ability to observe fish behavior under commercial shrimping conditions using infrared

technology. The research conducted since 1999 is reviewed here and the findings outlined.

6.1.1 Inclined Water Flow Studies

Because of the similarity in the size of the target catch and bycatch species, bycatch reduction technology in the Gulf of Mexico has had to rely on behavioral differences to achieve reduction. Observations of the Jones-Davis and Gulf Fisheye BRDs indicate that these BRD designs rely on snapper locating and electively exiting through an opening in the trawl. The problem observed in these BRD types is that, after capture, young snapper are reluctant to exit a trawl and many stay in the trawl until haulback. These observations imply that it may be beneficial to stimulate/force fish out of the escape opening during towing. The use of water flow to stimulate/force fish to escape seems to be a promising approach.

Preliminary observations of a prototype BRD Device (Figure 10) connected to the lower part of the turtle excluder device (TED) grid, featuring plastic covers attached to create a low flow area adjacent to the escape area, showed that these covers also created a vortex that stimulated/forced fish to continuously escape as they entered the area (Engas et al., 1999). Dye flow studies showed that the water circulated through the escape opening, back into the trawl, and forward toward the escape opening. In addition, dye flow studies showed that water coming through the lower part of the TED funnel (i.e., just above the top plastic cover) was drawn down, right behind the end of the top plastic cover. Fish that passed the TED grid were drawn down into the turbulent flow, turned toward the codend as they entered the escape area, then slowly dropped down under the trawl and escaped. There is strong indication that it was the inclined water flow through the escape opening that led to this high and continuous escapement. This design gave a strong indication that it is possible create a flow pattern around the escape openings of BRDs that will induce continuous fish escapement throughout towing. However, even though no shrimp were present during the evaluation, it was obvious to researchers that the circulating flow pattern observed at the escape opening of this particular design would create a greater potential for shrimp loss.

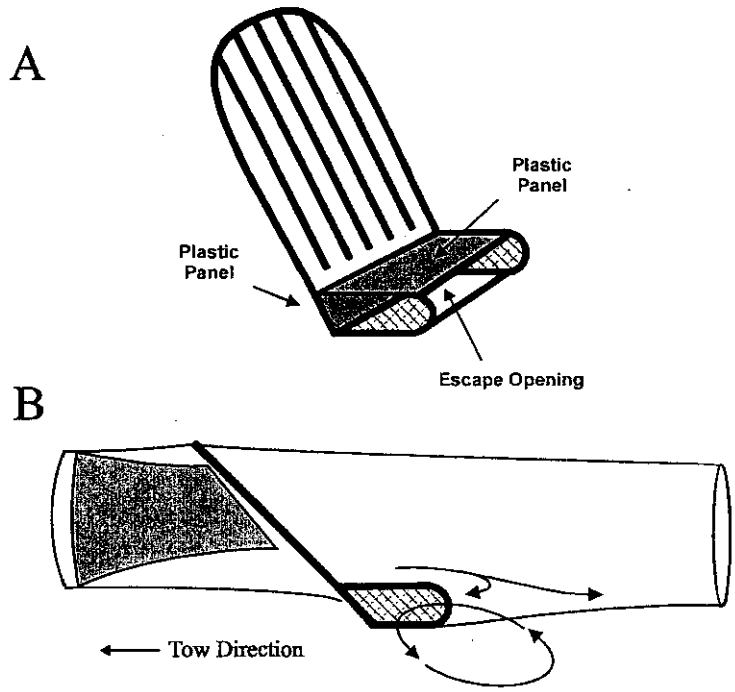

Figure 10. A) Schematic representation of prototype BRD. B) Water flow pattern observed.

To determine whether the frequent escapes observed in the prototype BRD were due to an inclined flow pattern, NMFS and Norwegian research biologists conducted a study to evaluate the swimming performance of juvenile red snappers and juvenile pinfish in an inclined water flow (Engas and Foster, 2002). Using a clear acrylic tilting swimming tube with propeller-driven flow, swimming was studied at a swimming speed of three body lengths/s with the tube either horizontal or lowered to an angle of 45° (Figure 11). Both species maintained a position between the visual reference points (bull's-eyes) using only the caudal fin for locomotion when the tube was horizontal. All the fish except one red snapper dropped out of the bull's-eye and fell back to the end of the tube when it was lowered to 45°. An erratic swimming pattern, including the use of pectoral fins, was then observed in both species, but the tail-beat frequency was not changed. The erratic swimming and pectoral activity displayed when the tube was inclined indicated that the fish experienced destabilizing forces or that swimming within an inclined flow could be an "unnatural" situation. This suggests that the frequent escapes observed when fish experience an inclined water flow at a trawl escape opening may be because they tend to leave this area rather than take up a position swimming "uphill" against the direction of flow.

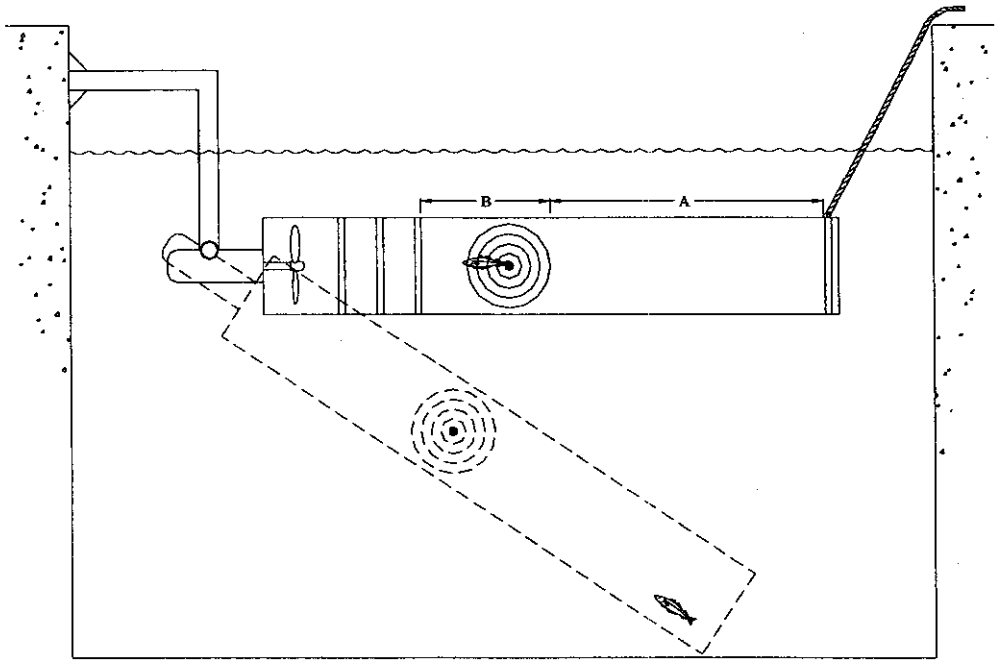

Figure 11. Diagram of experimental apparatus to evaluate fish response to inclined water flow.

6.1.2 The Fish Box

Based on the inclined water flow study, a prototype BRD design was developed similar to the prototype presented in Figure 10. The new design, called the Fish Box, was constructed separate from the TED (Figure 12). Plastic panels are installed on the front and top of the box frame to generate the inclined water flow pattern. A mesh funnel was installed immediately behind the Fish Box to reduce the likelihood of shrimp loss.

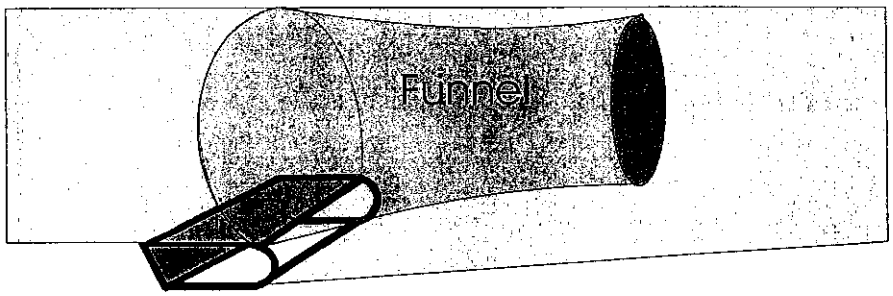

Figure 12. Fish Box bycatch reduction device.

Daylight observations of finfish entering the area of inclined water flow were similar to that of the original prototype design. After passing through the funnel, fish dropped down in the extension into the slow flow area under the funnel. Fish then advanced forward into the vertical flow area. When entering the area of the inclined water flow, most fish quickly dropped down out of the escape opening. Snapper appeared to linger in the area slightly longer than most species. However, escapement of snapper occurred at a higher rate than had been observed with any other BRD concept.

Two Fish Box designs were tested on commercial vessels. The Modified Fish Box was based on the same design except the top panel contained a curvature to enhance the vertical flow pattern. During the Fish Box certification tests, 35 tows were completed that met the certification protocol (NMFS, 1999) for evaluation of red snapper reduction. The estimated red snapper reduction in fishing mortality was 23.8% with a 95 % confidence interval was 15.2% to 32.4%. Thirty-six tows were completed for the Modified Fish Box. The estimated reduction in red snapper mortality was 18.3% with a 95% confidence interval of 4.3% to 32.2% (Foster, 2004). The reduction rate for snapper and total finfish obtained during the certification tests were lower than what occurred during behavioral observations. These results indicate that the behavioral responses observed during daylight conditions likely are not the same as those occurring at night.

6.1.3 Side Opening Grids

Researchers at the Harvesting Systems and Engineering Division have also conducted research on the potential of using TEDs as BRDS. A study conducted by Bates and Vinsonhaler (1956) gave indications of a technique that could be applied to a grid design to induce fish escapement. The focus of their study was to develop a means of diverting juvenile fish away from the water intake pipe in hydroelectric facilities. They found that by placing louvers diagonally across the intake canal, fish could be diverted horizontally across the canal into a bypass channel away from the intake pipe. This system was successful with fish much smaller than the spacing between the louvers and the effectiveness of the system was due to the behavioral response to the louver system rather than mechanical means. Based on this research, a study was conducted to evaluate the potential of side opening grids in reducing shrimp trawl finfish bycatch (Foster and Watson, 2003).

A double grid (Figure 13) was constructed in such a way as to reduce the amount of visible space between the bars while not restricting the passage of shrimp into the codend. The grid consisted of two rows of bars, offset so that a given bar lined up in the space between the bars of the opposing row. A turtle escape opening was created by removing a large rectangular piece of trawl webbing from the side of the extension. The removed webbing was replaced by interchangeable flaps. Three flap designs were constructed with finfish escape holes located in the bottom/side of the extension, the middle of the extension, and the top/side of the extension in order to determine the optimal escape opening location.

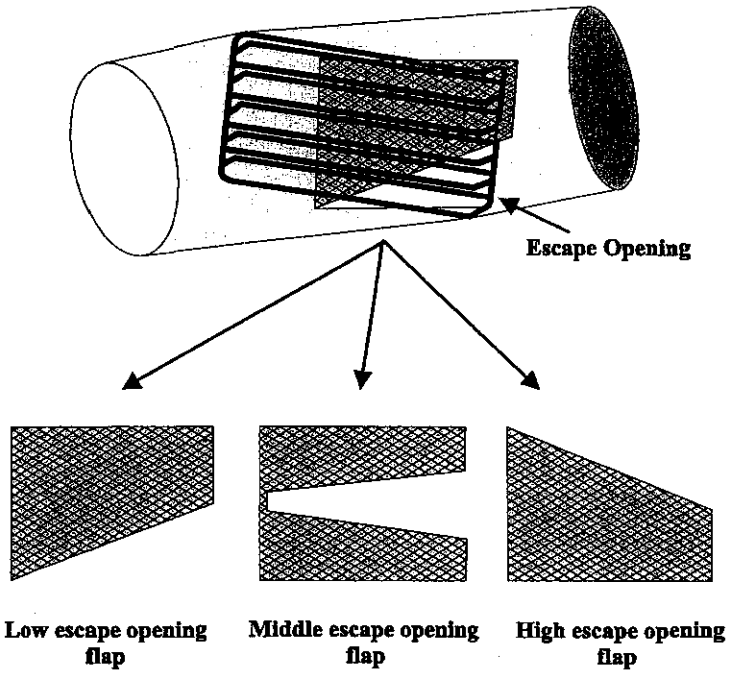

Figure 13. Side Opening Grid with flap configurations.

The grid was installed in the trawl just forward of the codend, oriented to exclude fish out of the side of the extension. The double grid was also rotated 90° in a top opening configuration with the flap removed in order to compare the behavioral responses of fish to two different grid orientations. All observations of fish behavior were made under daytime ambient light conditions.

The behavioral responses described were based on observations of juvenile red snapper (*Lutjanus campechanus*)—a demersal fish—and Atlantic bumper (*Chlorscombrus chrysurus*) and the striped anchovy (*Anchoa hepsetus*)—two small pelagic species. All fish in this study were small enough to pass between the bars of the grid, and escapement was a result of behavioral responses. The response of both pelagic and demersal fish to the side opening grid was found to be a typical predator avoidance response similar to the documented response of fish in the path of an otter board (for details see Wardle, 1986). When the fish had clear passage out of the escape opening, they turned at an angle to the water flow and passed down the face of the grid and out of the escape opening. With the top opening grid, pelagic fish exhibited a successful avoidance strategy and the escape rate was high. However, the overall escape rate for snapper in the top opening grid was much lower than with the grid opening out of the side. The results of this study suggest that while pelagic fish appear to be able to negotiate side or top opening grids equally well, the side opening grid offers a more natural avoidance route for demersal species such as red snapper. Observations of the side opening grid demonstrated great potential for use as a TED as well as a bycatch reduction device.

The side opening grid was subjected to and passed the small turtle certification test in 2000 in preparation for a BRD certification test on commercial vessels. BRD certification tests on a commercial vessel took place in 2001. A total of 19 tows were completed on the trip. At the beginning of the test, the observer and captain immediately noticed that the Side Opening Grid was not achieving the rate of fish reduction expected. During the trip, the grid was fished in four different configurations with similar results. After the trip, testing of the grid was discontinued due to poor performance.

6.1.4 Red Snapper Sensitivity to Infrared Light

The results of the Fish Box and Side Opening Grid BRDs underscored the need to develop an unobtrusive means for observing fish behavior in trawls under night conditions. Considering available technology, infrared lighting appears to be the most practical approach for this application.

Prior to developing an infrared camera and lighting system for use in BRD research, NMFS scientists conducted research to test juvenile snapper sensitivity to infrared light. The optomotor response, an unconditioned motor reflex (Harden Jones, 1963), was used to measure red snapper sensitivity to infrared light. The apparatus was contained in a circular tank 1.22 m in diameter filled with 30 cm of sea water (Figure 14). Two clear lexan rings were placed in the tank enclosing a swim channel with an outside diameter of 91 cm and inside diameter of 25 cm. The clear rings prevented fish from detecting turbulence created by the rotating outer and inner striped backgrounds. The striped backgrounds were also constructed of lexan painted white with 2.5 cm wide vertical black stripes 5 cm apart. The patterned rings were suspended off of the bottom by a frame attached to an aluminum axis upon which the visual stimulus turned. An opaque white plexiglass disk placed over the top of the apparatus prevented fish from responding to visual stimulus from above.

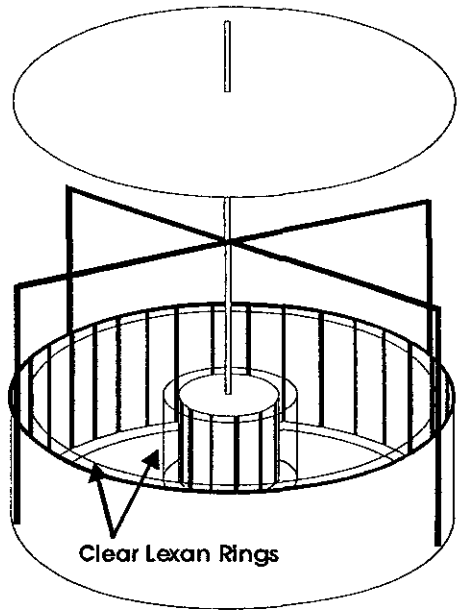

Figure 14. Diagram of Optomotor Apparatus.

Experiments were carried out in April 2003 at the University of Mississippi and at the NMFS laboratory in Pascagoula, Mississippi. A total of 20 juvenile snapper between 80 cm and 120 cm (fork length) were used. Five snapper were used in each trial. Snapper were placed in the tank in an enclosed room illuminated by fluorescent lighting. They were allowed to acclimate for one hour prior to testing. At the start of the test the visual pattern was rotated by hand at a rate of approximately 10 rpm. The test period lasted 5 minutes. At 1-minute intervals, the direction of rotation changed. After the initial treatment, the lights were turned off and snapper were allowed to visually adapt to the darkness. The tank was then illuminated with 60 LED lights with a peak wavelength of 880 nm. The treatment was then repeated as with the fluorescent lighting. All observations were made with a small CCD camera viewing through a 5 cm hole in the side of the tank.

Upon rotation of the visual pattern, all of the snapper illuminated by fluorescent lighting quickly began swimming around the swim channel in the direction of the pattern rotation, keeping pace with the pattern (Figure 15a). When the direction was reversed, snapper turned 180° and again swam in the direction of rotation. When exposed to the rotating pattern illuminated by infrared light, all of the snapper exhibited random orientation and movement indicating that snapper failed to see the moving pattern illuminated by infrared lights (Figure 15b). The results of this experiment demonstrate the potential for the use of infrared lights for observing red snapper behavior in trawls under commercial trawling conditions.

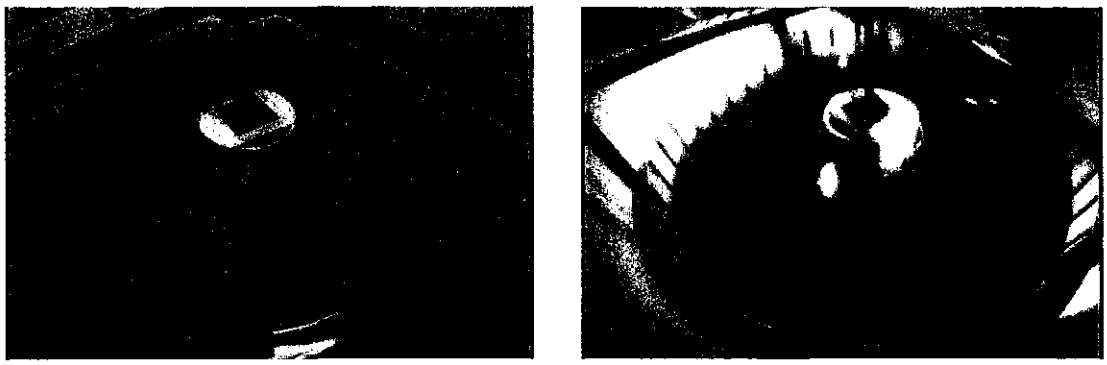

A B

Figure 15. Response of juvenile red snapper when the optomotor apparatus is turned clockwise with a) fluorescent lighting and b) infrared illumination.

6.1.5 Night Observations using Infrared Lights

Trawl operations using infrared lights to observe fish behavior under dark conditions began in May of 2003 on the R/V HST1. The BRDs evaluated during the test period were Fisheyes, Jones-Davis BRD, Fish Box, and Side Opening Grid.

Right away researchers were able to determine that the fish behavior under dark conditions differed greatly from daylight observations. Under light conditions, fish being overtaken by the trawl exhibit a strong optomotor response facing into the direction of the tow. Fish were able to maintain their spatial orientation to the trawl components rarely making contact with the webbing. Under dark conditions, the orientation of fish that are being overtaken is more random. There is some degree of optomotor response observed, possibly from the bioluminescence stirred from the webbing moving through the water. Fish appear more panicked, darting back and forth and often contacting the webbing and other components of the trawl. Night observations of fish encountering the Side Opening Grid indicate that fish are able to detect the grid bars. But under very low light conditions, fish are unable to be herded by the slope of the bars toward the escape openings. Fish encountering the slow flow areas of the other BRD designs seem even more reserved to maintain their position in the slow flow areas as compared to daylight conditions, relying heavily on crowding as the primary stimulus for escapement. Observations of the Fish Box under day vs. night conditions indicate that escapement occurs at a much higher rate under daytime conditions. These observations give indication that the inclined water flow exhibited by this design stimulates fish rather than forces fish to leave when escapement occurs.

In August 2003, research was conducted on the R/V Caretta to study fish behavior in relation to placement of escape openings in the trawl extension (Foster, 2003). Three BRD designs were evaluated, all based on the fisheye BRD concept (Figure 16). The Triangle Fisheyes are two BRDs in the shape of right triangles. The fisheyes were placed in the bottom of the extension with a triangular piece of webbing removed creating an escape opening on the bottom side of the extension. The Side Opening Half Moon Fisheyes (another double BRD design) was installed in the sides of the extension. The straight side of the escape opening was flush with the sides of the extension and the curved portion of the frame intruded inside of the extension. The Bottom Opening Half Moon Fisheyes had the same escape opening dimensions as the side opening design. However, with this design the curved portion of the escape openings faced outward. The BRDs were installed in the bottom of the extension, 17 meshes to either side of center. A 173cm x 25cm piece of black plastic (herculite) was attached to the bottom of the extension behind the escape openings to prevent shrimp from crawling out of the trawl.

Triangle fisheyes

Side Opening Half Moon Fisheyes

Bottom Opening Half Moon Fisheyes

Figure 16. BRD Designs evaluated during the August, 2003 research cruise on the R/V Caretta.

Behavioral observations with the Triangle Fisheyes indicate demersal finfish such as juvenile red snapper, croaker, and longspine porgy were observed reacting to the slow water flow areas created by the fisheyes. The fisheyes were observed to have a slight inward turn causing the inside corners of the triangles to ride lower in the extension than the rest of the fisheye frame. The fish tended to take up position in the lowest part of the extension behind the BRD and the majority took up position behind the inside corners of the fisheyes, away from the escape opening (Figure 17). Shrimp were also observed taking up position in the slow flow areas behind the fisheyes.

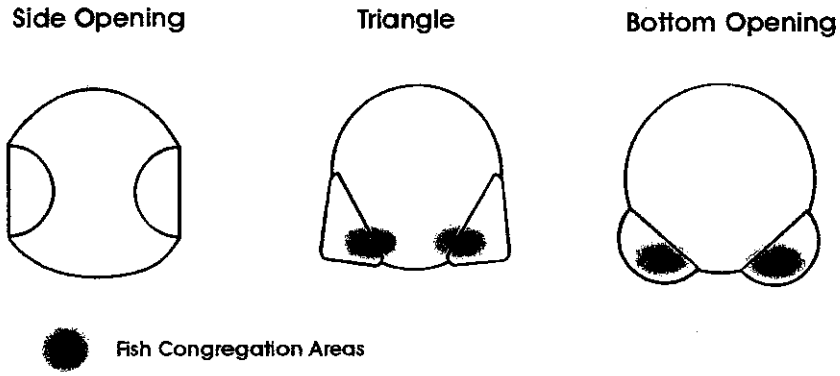

Figure 17. Fisheye configurations with fish congregation areas.

Fish and shrimp observations were then obtained around the Side Opening Half Moon Fisheyes. There was around 8cm of clearance between the bottom of the escape openings and the bottom of the extension. Most of the fish paid little or no attention to the fisheyes as they passed through the TED extension and passed into the codend. Fish that did take up position in the slow flow areas behind the fisheyes did so for only a short period of time before falling back. Shrimp also responded to the slow flow areas at a much lower rate than they did with the triangle fisheye. During haulback, fish and shrimp were observed advancing forward from the codend in the bottom of the extension and passing under the escape openings of the fisheyes with little or no response to the BRDs.

Based on these observations, a third fisheye design was constructed. The Bottom Opening Half Moon Fisheye was installed to allow the BRD escape openings to be the lowest part of the extension. A shrimp crawl barrier was also installed because the bottom of the extension is an area of high shrimp occurrence. Juvenile snapper as well as other demersal finfish responded well to the low opening fisheyes with many fish taking up position in the lowest part of the extension near the escape openings and many escapes were observed while towing. The water flow was observed to be very low immediately behind the escape opening and a small number of shrimp were observed swimming forward across the barrier.

After the behavioral observations were obtained, proof of concept evaluations were conducted with the Bottom Opening Half Moon Fisheyes on the R/V Caretta. Twenty-three paired tows were completed for this configuration. Sixteen tows were analyzed as non-problem tows. The total bycatch reduction was 42.7% with a shrimp loss of 3.4%. The reduction for 0 year class red snapper was 12.7 %, while the reduction rate for age 1 red snapper was 56.0 %. The estimated red snapper fishing mortality (F) reduction was 43%. (Foster, 2003).

Certification tests were initiated in fall 2003 with the bottom opening fisheye design. However, operational problems were encountered with the design in that the fisheyes located on the bottom of the trawl had a tendency to scoop mud during the haulback, causing the net to bog and rip between the fisheyes and TED. Testing has been discontinued on this design until the operational problems can be overcome.

6.1.6 NOAA Composite Panel BRD

Otter trawl bycatch reduction devices that incorporate funnels and/or leading panels such as the Radial Escape Section, Extended Funnel and Jones-Davis BRD have been evaluated extensively in trawl fisheries throughout the world. In the southeast United States shrimp trawl fishery, funnel BRDs have shown great potential for excluding finfish bycatch while maintaining a high shrimp retention rate. However, this technique has not been widely accepted by fishermen due in part to the complexity and operational problems common with this technology. In 2005, NMFS' Southeast Fisheries Science Center is investigating two variations of a new BRD design for (1) simplicity, (2) effectiveness in reducing finfish bycatch, and (3) the retention of shrimp. The NOAA

Composite Panel BRD (Figure 18) differs from previous funnel BRDs in that the funnel is replaced by two composite webbing panels installed in the extension behind a TED.

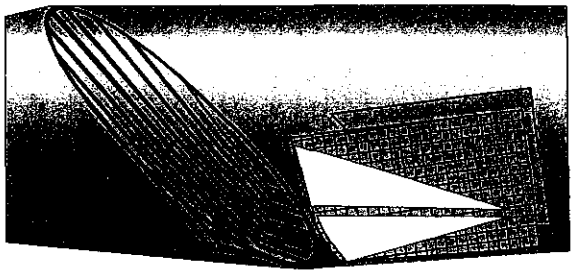

Figure 18. a) NOAA Composite Panel BRD with b) schematic of the composite panel construction.

a)

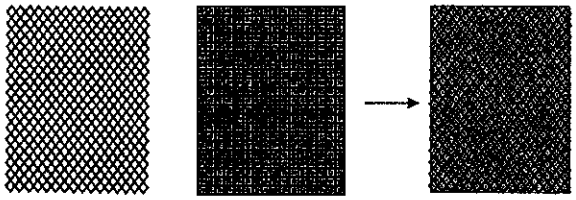

b)

Each composite panel is composed of two overlapping panels—a diamond mesh panel (interior) and a square mesh panel (exterior). Two configurations of composite panels (designs 1 and 2) are being evaluated. During the development phase, diver observations concluded the addition of square mesh panels provide improved clearance between the panels and the extension for fish to have clear passage out of the escape openings. The clearance between the composite panel and the extension was 13cm (design 1) and 20cm (2). The clearance achieved with the composite panels eliminates the need for extension hoops, which are typically used with funnel BRDS and are operationally problematic. The initial field trials on commercial vessels (design 2) are encouraging, with positive feedback from fishermen on the BRD's ease of use as well as its performance in reducing bycatch. This new innovation in technology appears to exhibit the favorable attributes of funnel BRDs while greatly reducing the complexity and operational problems with previous designs. Field evaluations of this prototype design are currently underway.

6.1.7 Swimming Performance and Behavior

Understanding fish behavior in trawls is a key to developing effective bycatch reduction technology. However, the ability of fish to respond in a given environment is limited by performance thresholds. To better understand red snapper swimming performance and how it is affected by environmental factors, NMFS assisted the University of Mississippi on a three year MARFIN project entitled "Behavior and Swimming Performance of Red Snapper, *Lutjanus campechanus*: Its Application to Bycatch Reduction."